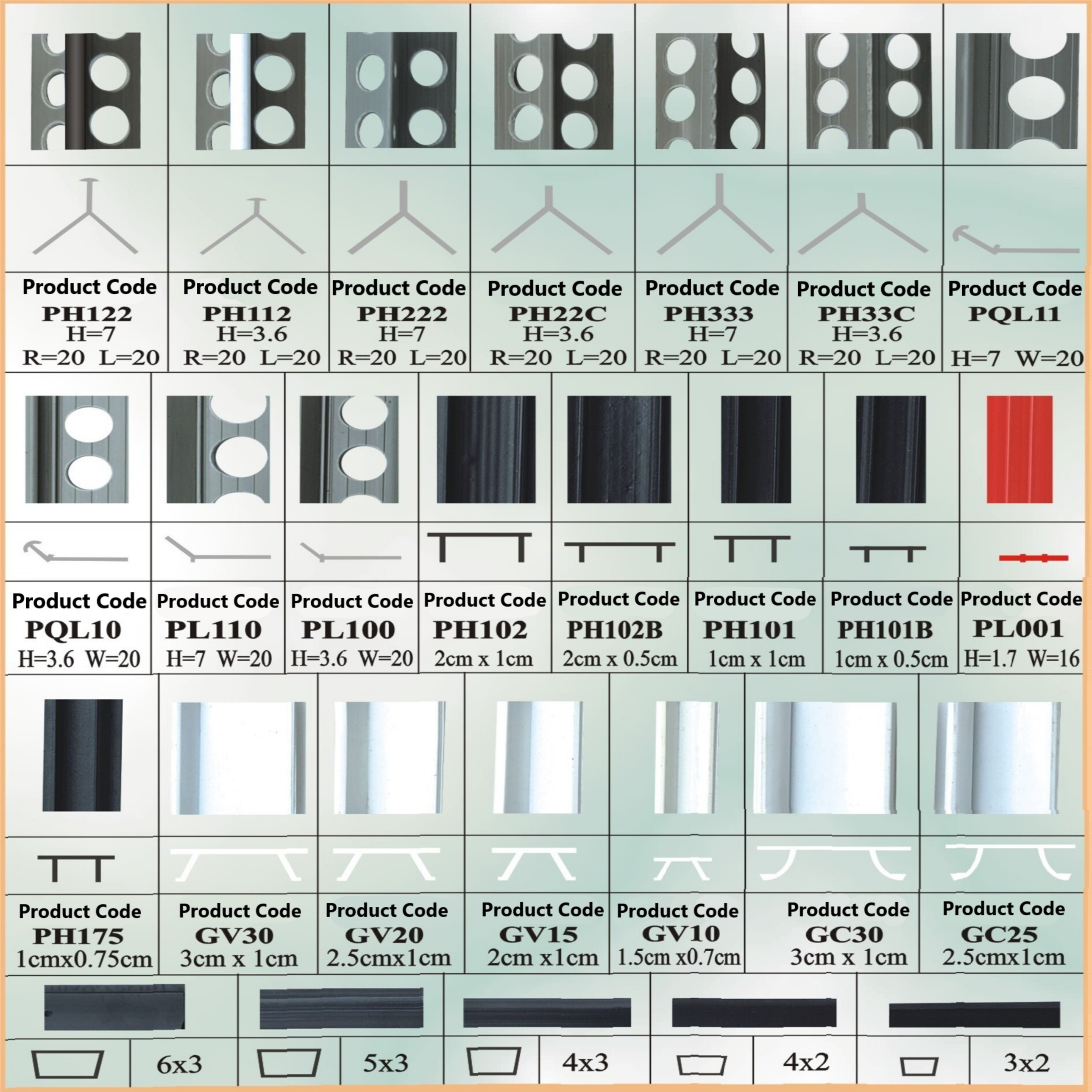
Product Code
PH122
H=7
R=20 L=20
Product Code
PH112
H=3.6
R=20 L=20
Product Code
PH222
H=7
R=20 L=20
Product Code
PH22C
H=3.6
R=20 L=20
Product Code
PH333
H=7
R=20 L=20
Product Code
PH33C
H=3.6
R=20 L=20
Product Code
PQL11
H=7 W=20
Product Code
PQL10
H=3.6 W=20
Product Code
PL110
H=7 W=20
Product Code
PL100
H=3.6 W=20
Product Code
PH102
2cm x 1cm
Product Code
PH102B
2cm x 0.5cm
Product Code
PH101
1cm x 1cm
Product Code
PH101B
1cm x 0.5cm
Product Code
PL001
H=1.7 W=16
Product Code
PH175
1cmx0.75cm
Product Code
GV30
3cm x 1cm
Product Code
GV20
2.5cmx1cm
Product Code
GV15
2cm x1cm
Product Code
GV10
1.5cm x0.7cm
Product Code
GC30
3cm x 1cm
Product Code
GC25
2.5cmx1cm
6x3
5x3
4x3
4x2
3x2

C Shaped Drywall Expansion Joint

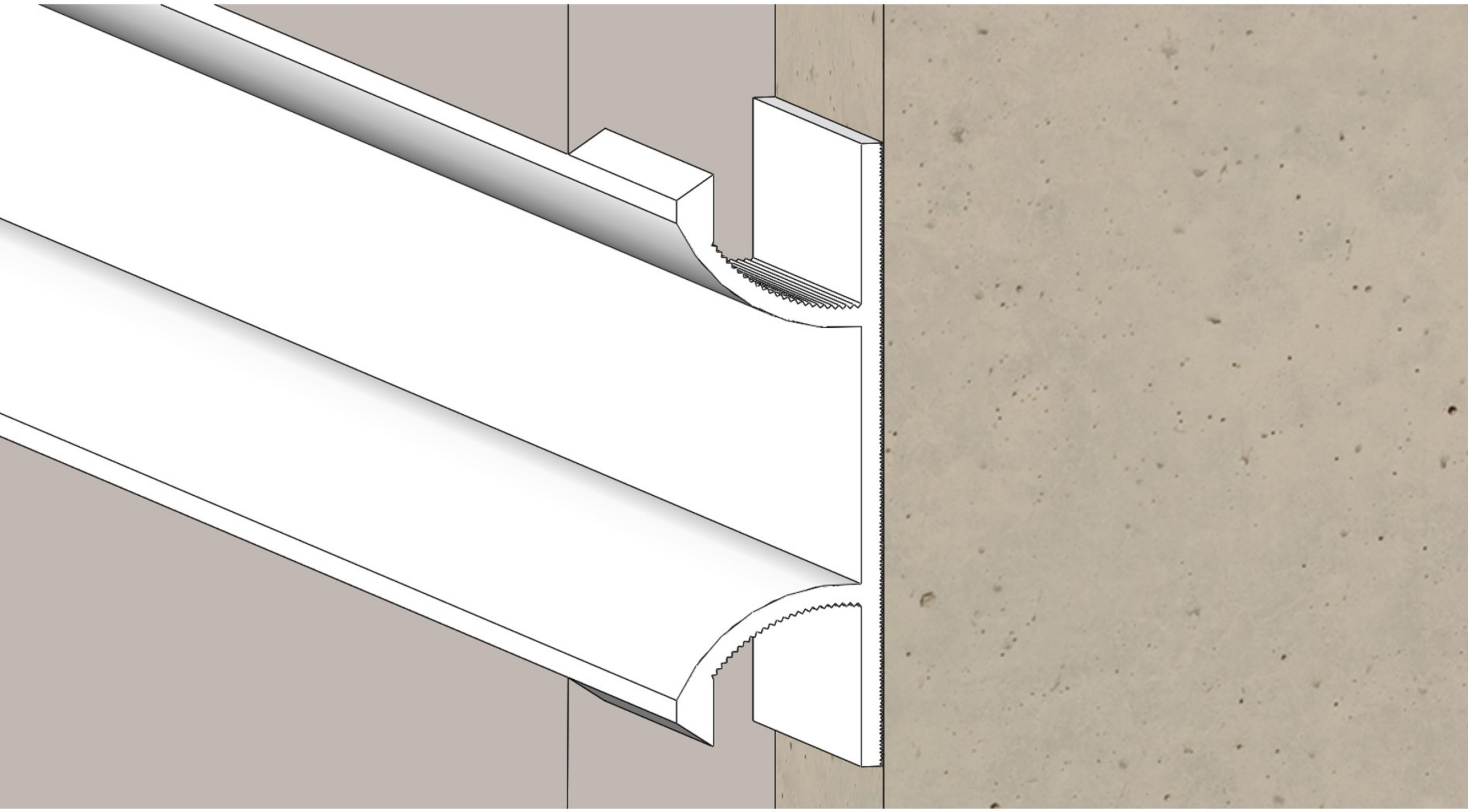

Product description:
It is applied between drywall panels or ceiling to relieve stress of expansion and contraction of drywall.

Feature:
Allowing for expansion in both walls and ceilings, and improve working efficiency.

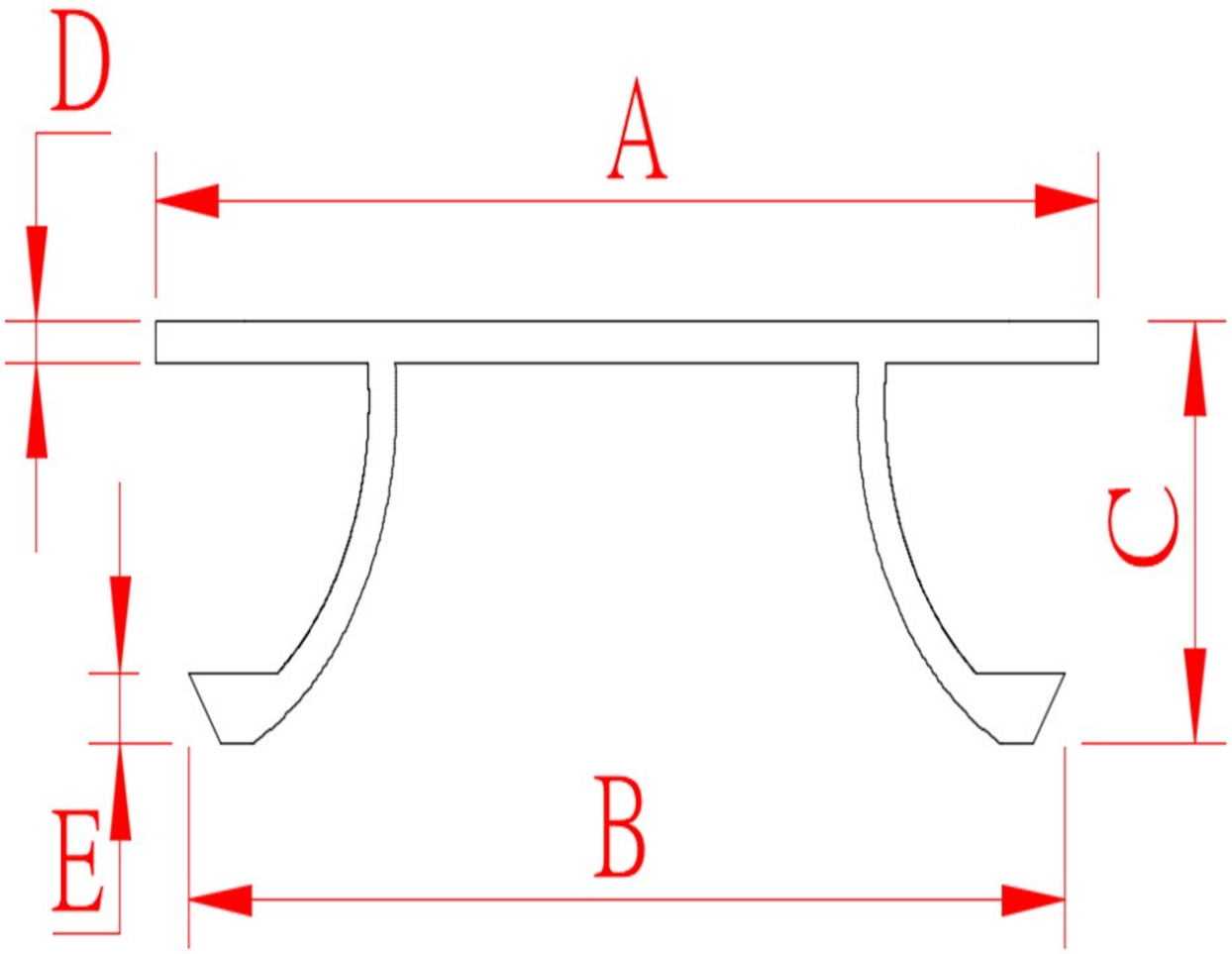

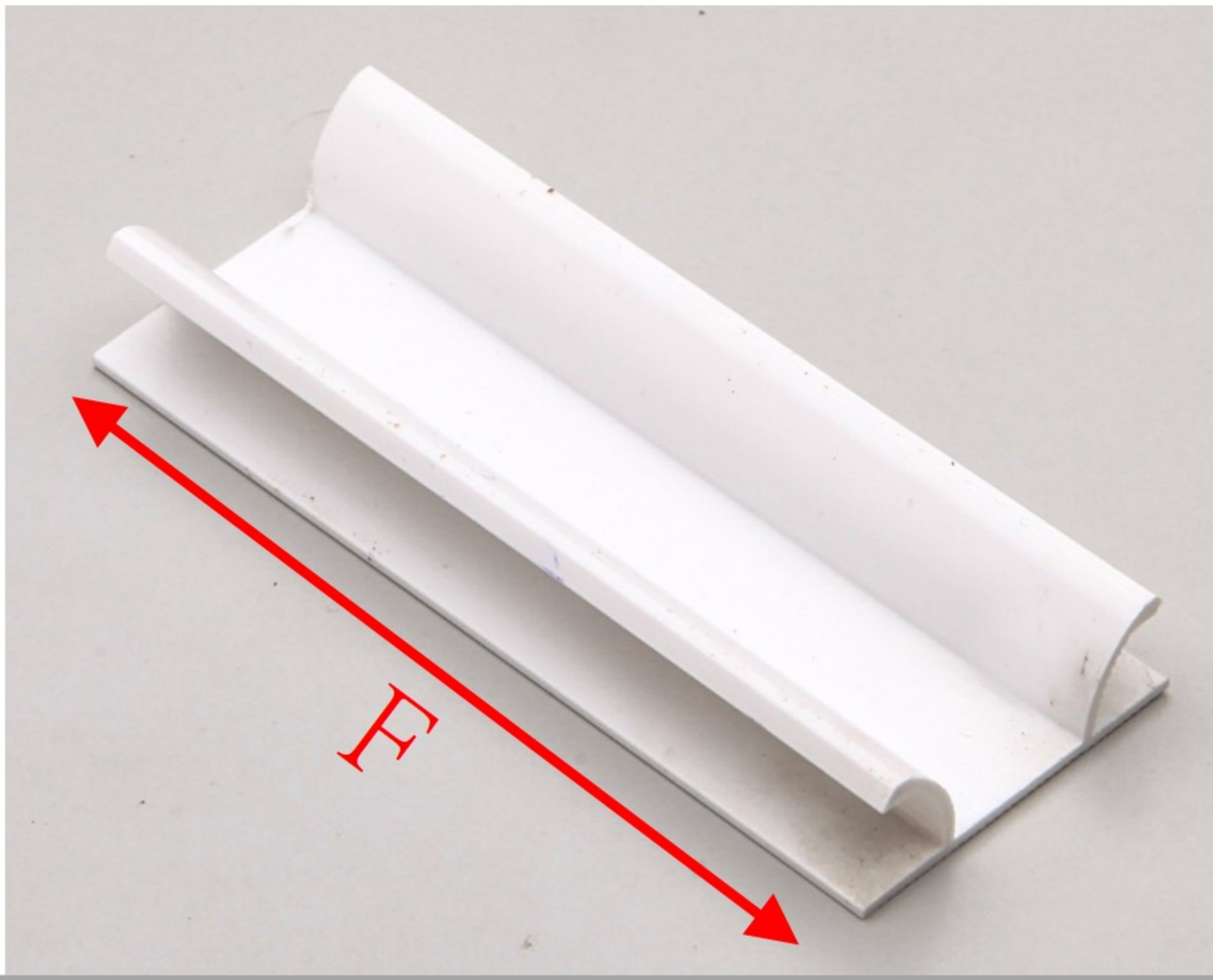

	A(mm)	B(mm)	C(mm)	D(mm)	E(mm)	F(m)
GC25	32.6	30	11.2	1.1	1.9	2.0
GC30	37.6	35	11.2	1.1	1.9	2.0

U Shaped Drywall Expansion Joint (1)

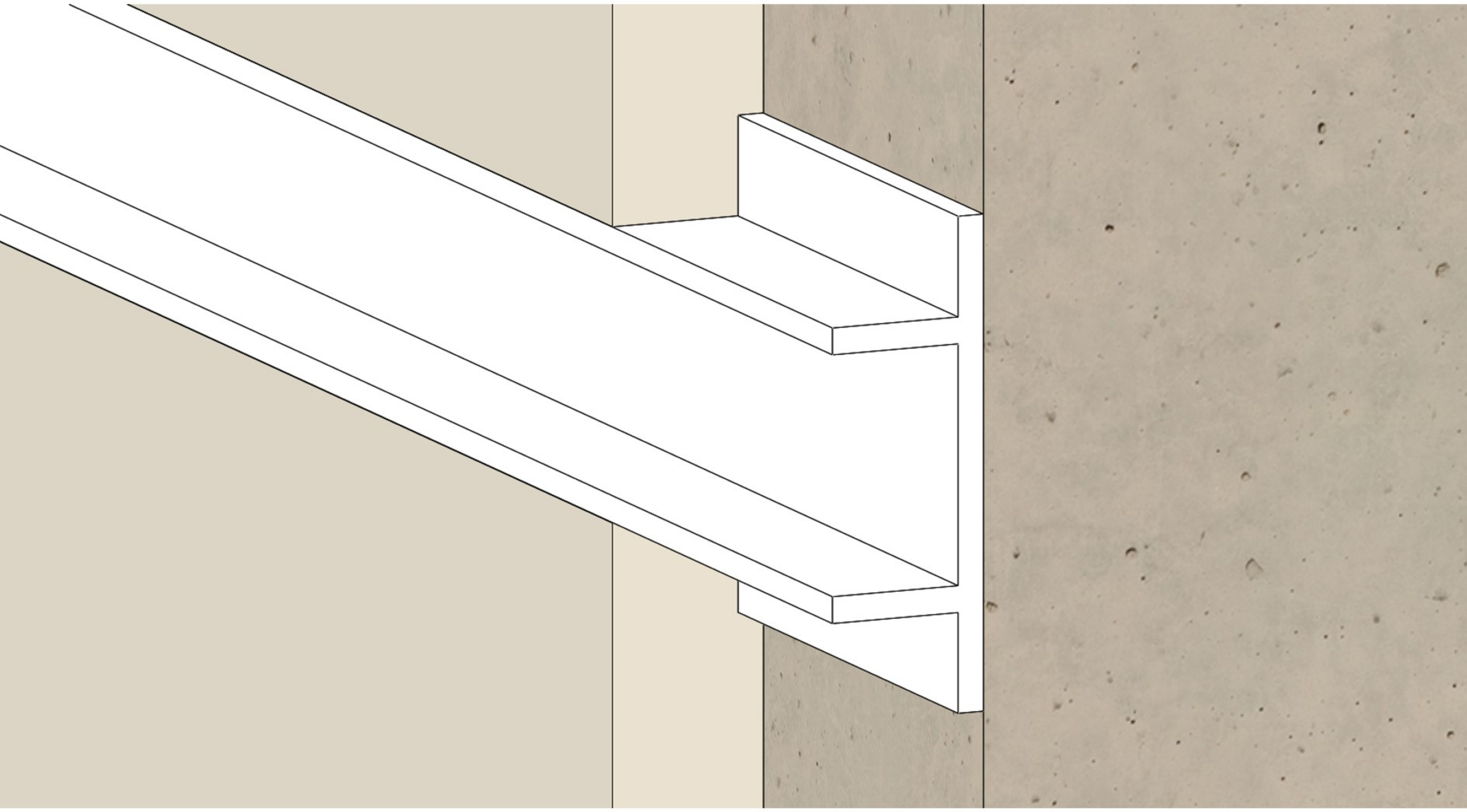

Product description:
It is applied between drywall panels or ceiling to relieve stress of expansion and contraction of drywall.

Feature:
Allowing for expansion in both walls and ceilings, and improve working efficiency.

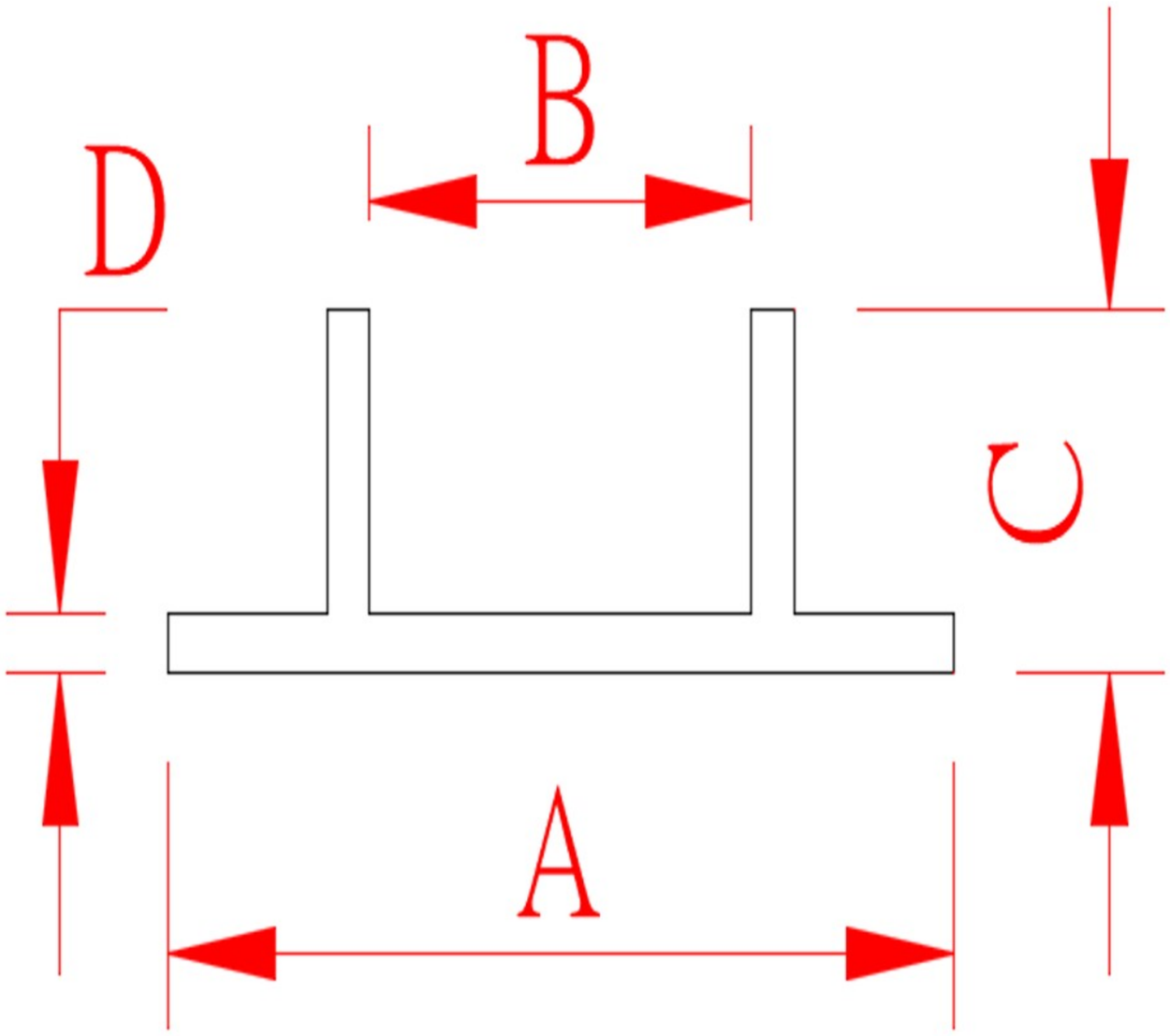

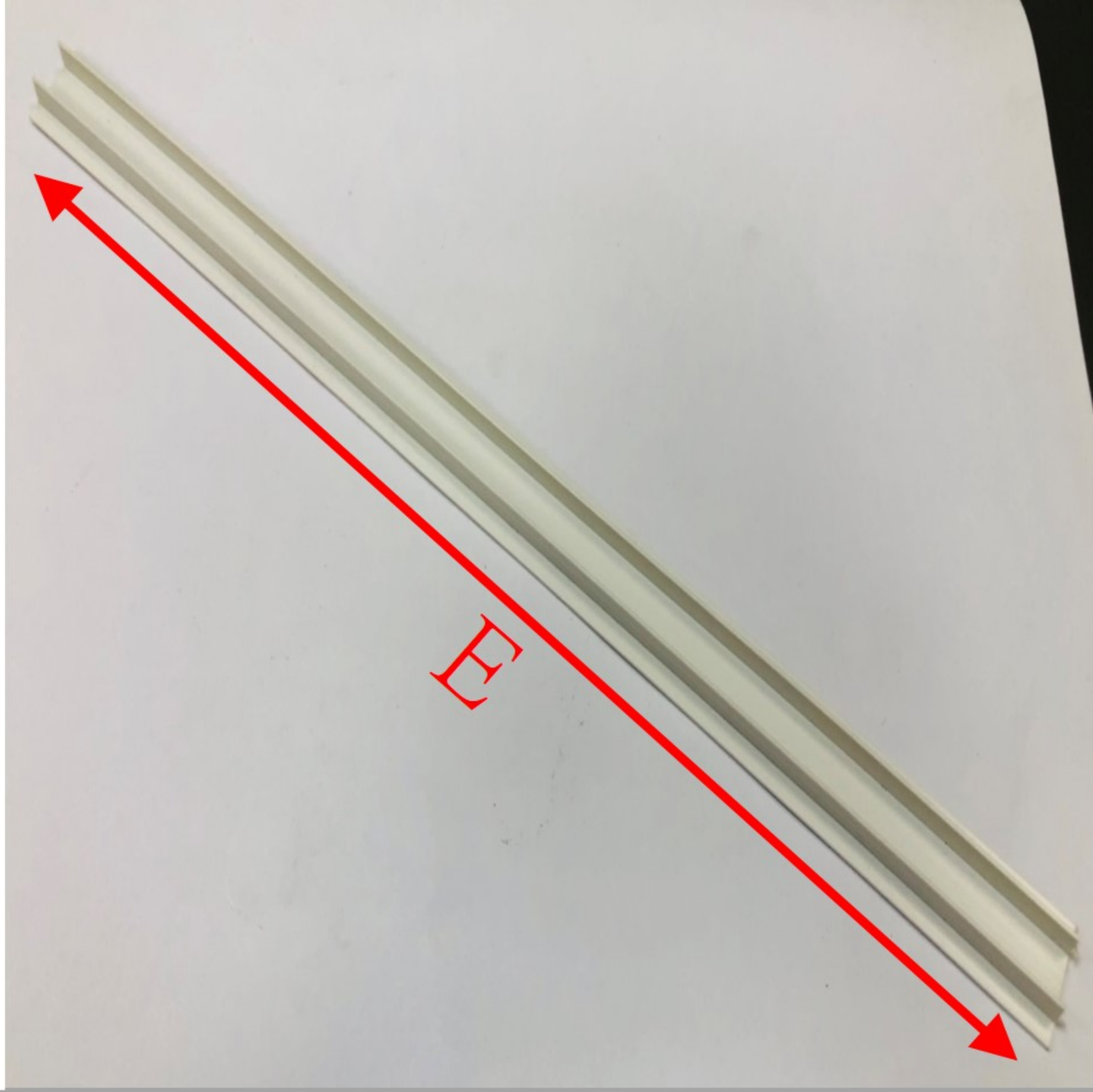

	A(mm)	B(mm)	C(mm)	D(mm)	E(m)
GU0905	18.5	9	5.6	1	2.0
GU1605	24.5	17	6	1	2.0

U Shaped Drywall Expansion Joint (2)

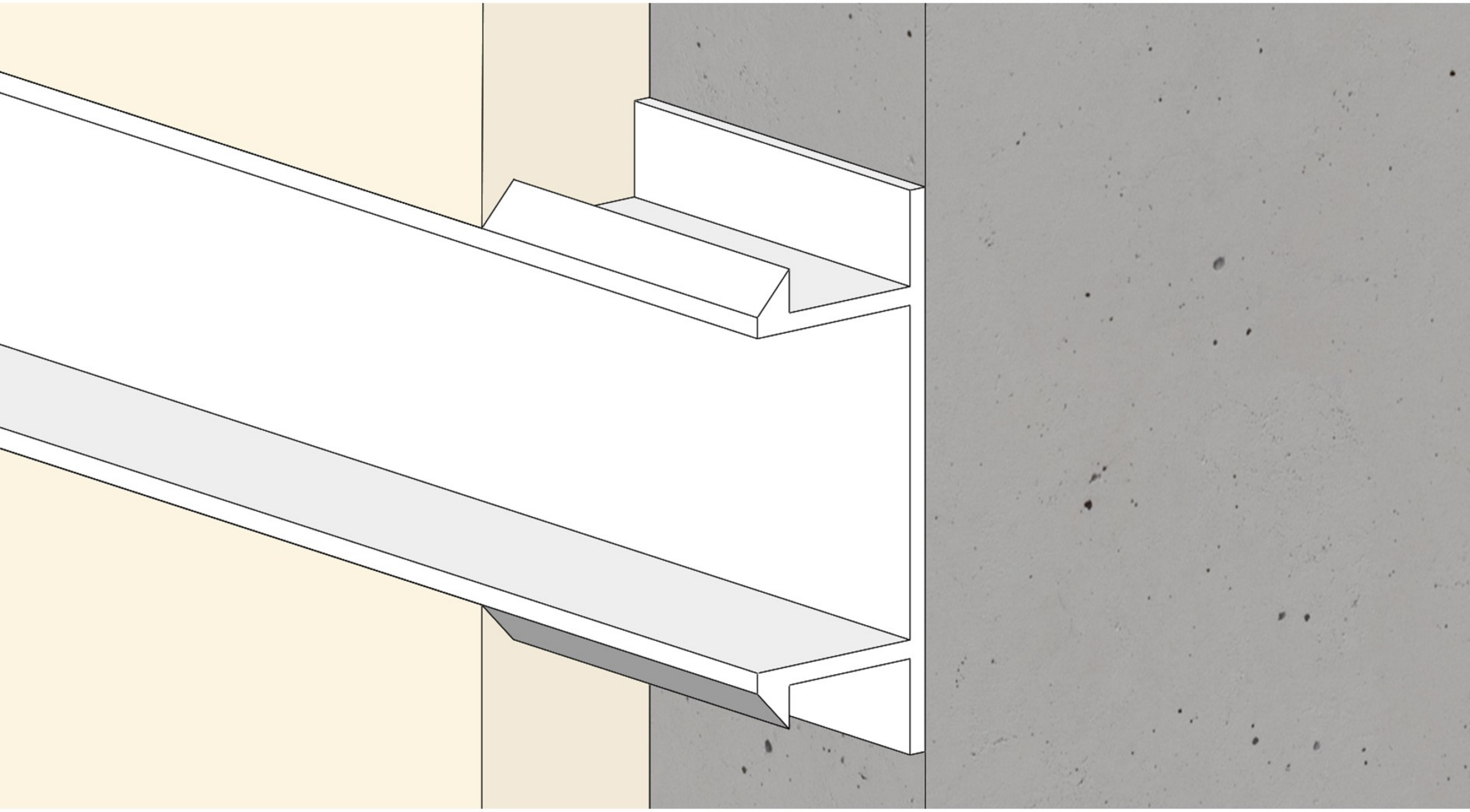

Product description:
It is applied between drywall panels or ceiling to relieve stress of expansion and contraction of drywall.

Feature:
Allowing for expansion in both walls and ceilings, and improve working efficiency.

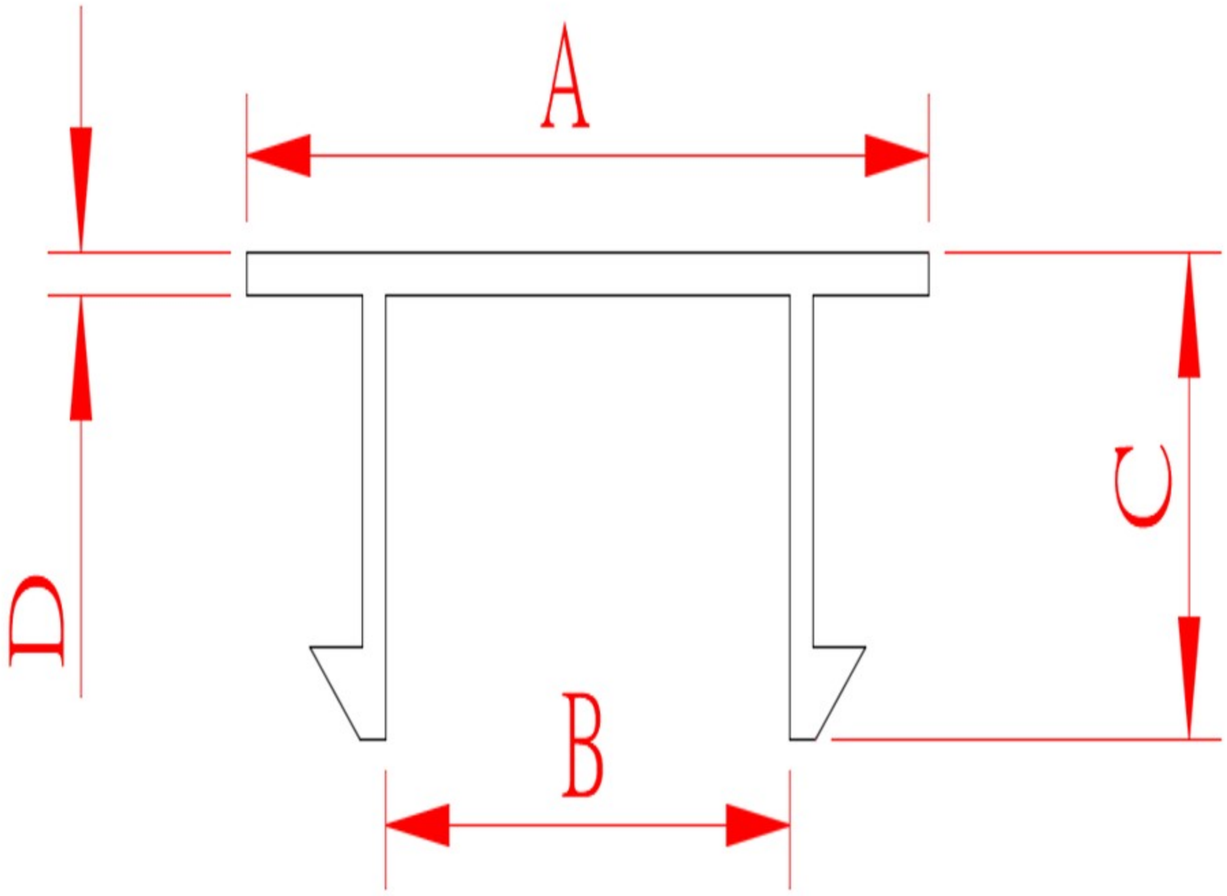

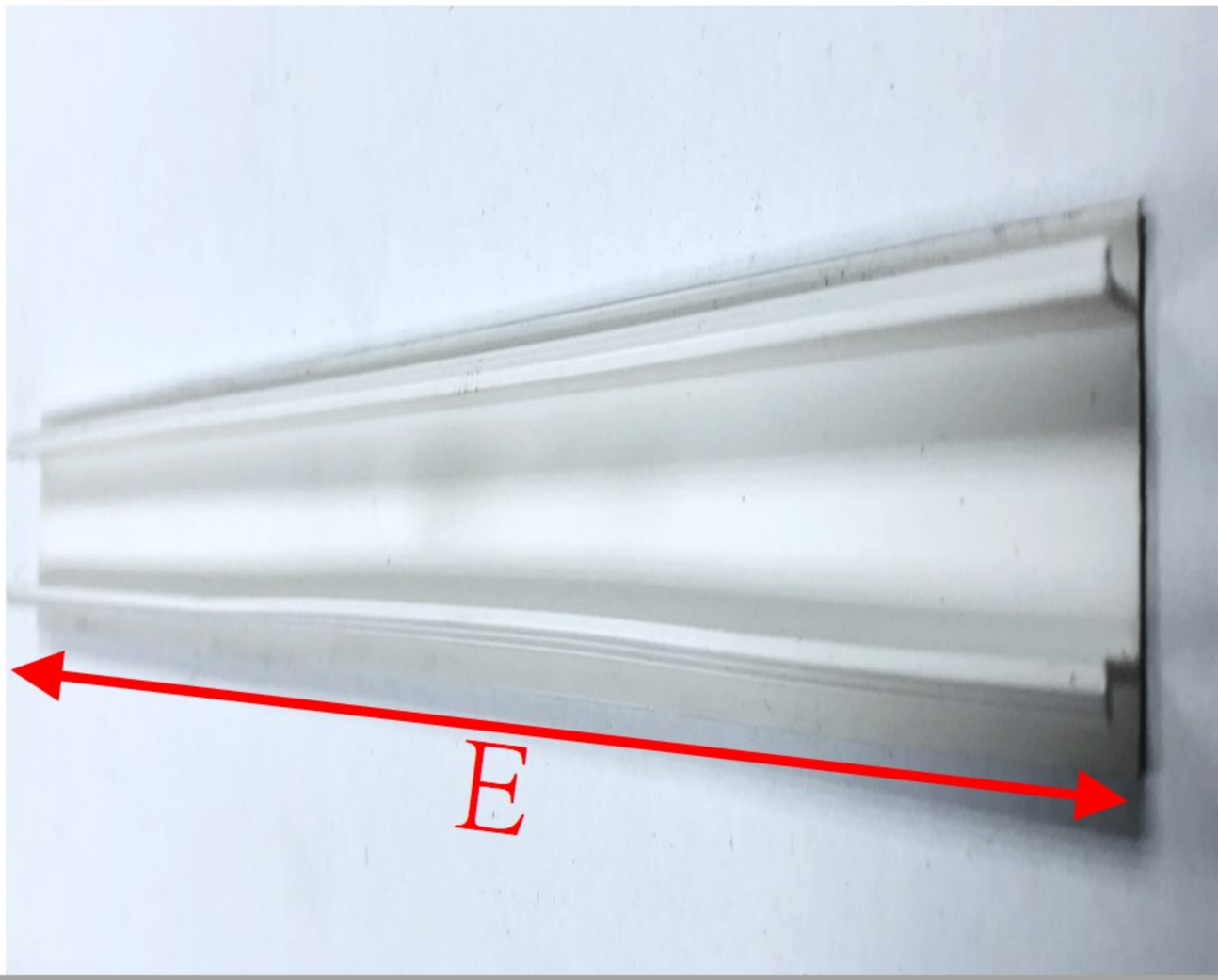

	A(mm)	B(mm)	C(mm)	D(mm)	E(m)
GU1609	27	16	10	0.9	2.0
GU2010	30	20	11	0.9	2.0
GU5010	62.6	49.6	11.3	1.1	2.0

V Shaped Drywall Expansion Joint

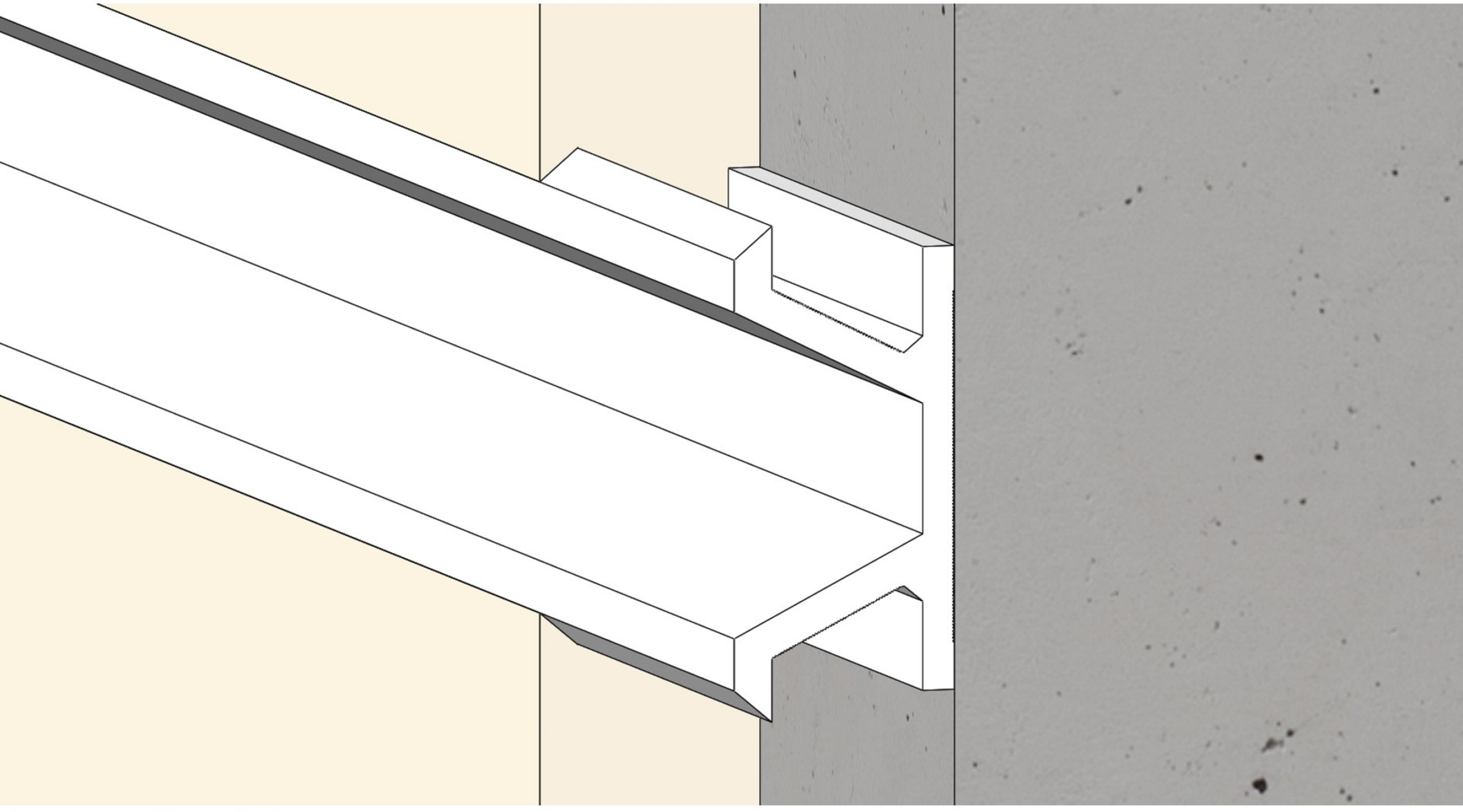

Product description:
It is applied between drywall panels or ceiling to relieve stress of expansion and contraction of drywall.

Feature:
Allowing for expansion in both walls and ceilings, and improve working efficiency.

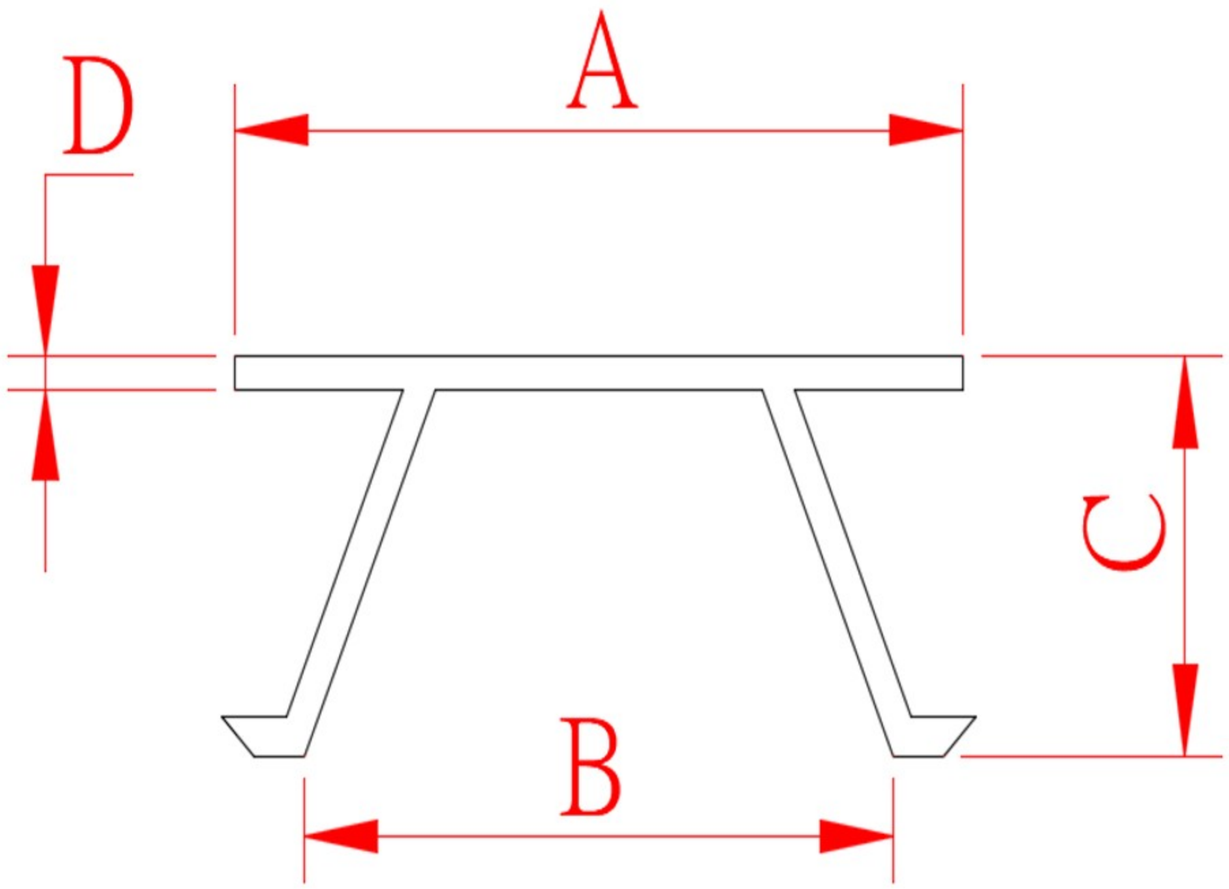

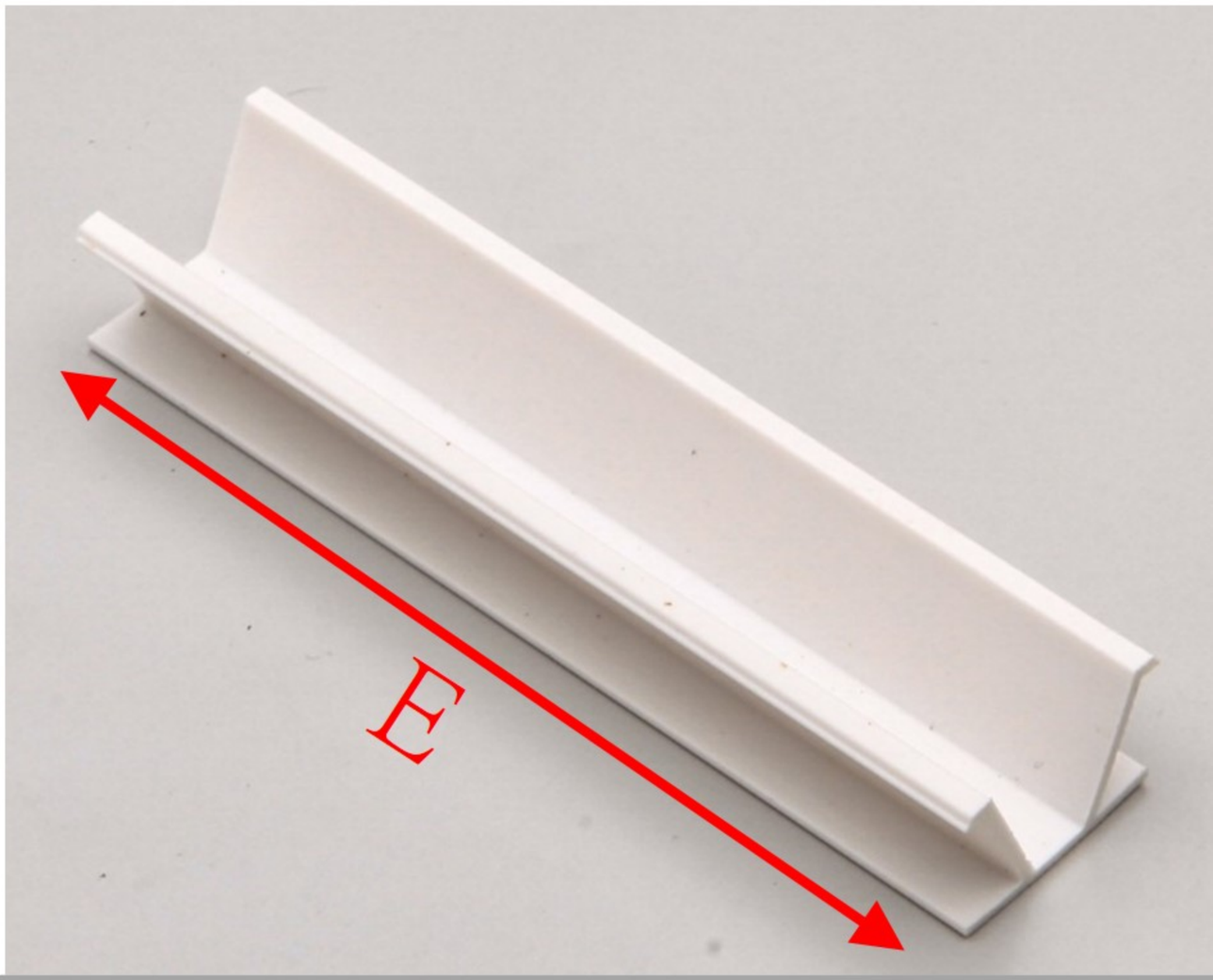

	A(mm)	B(mm)	C(mm)	D(mm)	E(m)
GV10	13.6	10	7	0.9	2.0
GV15	18.7	15	11	0.9	2.0
GV20	24.7	20	11	0.9	2.0
GV30	35.4	30	11	0.9	2.0

Q Shaped Plaster Trim Bead

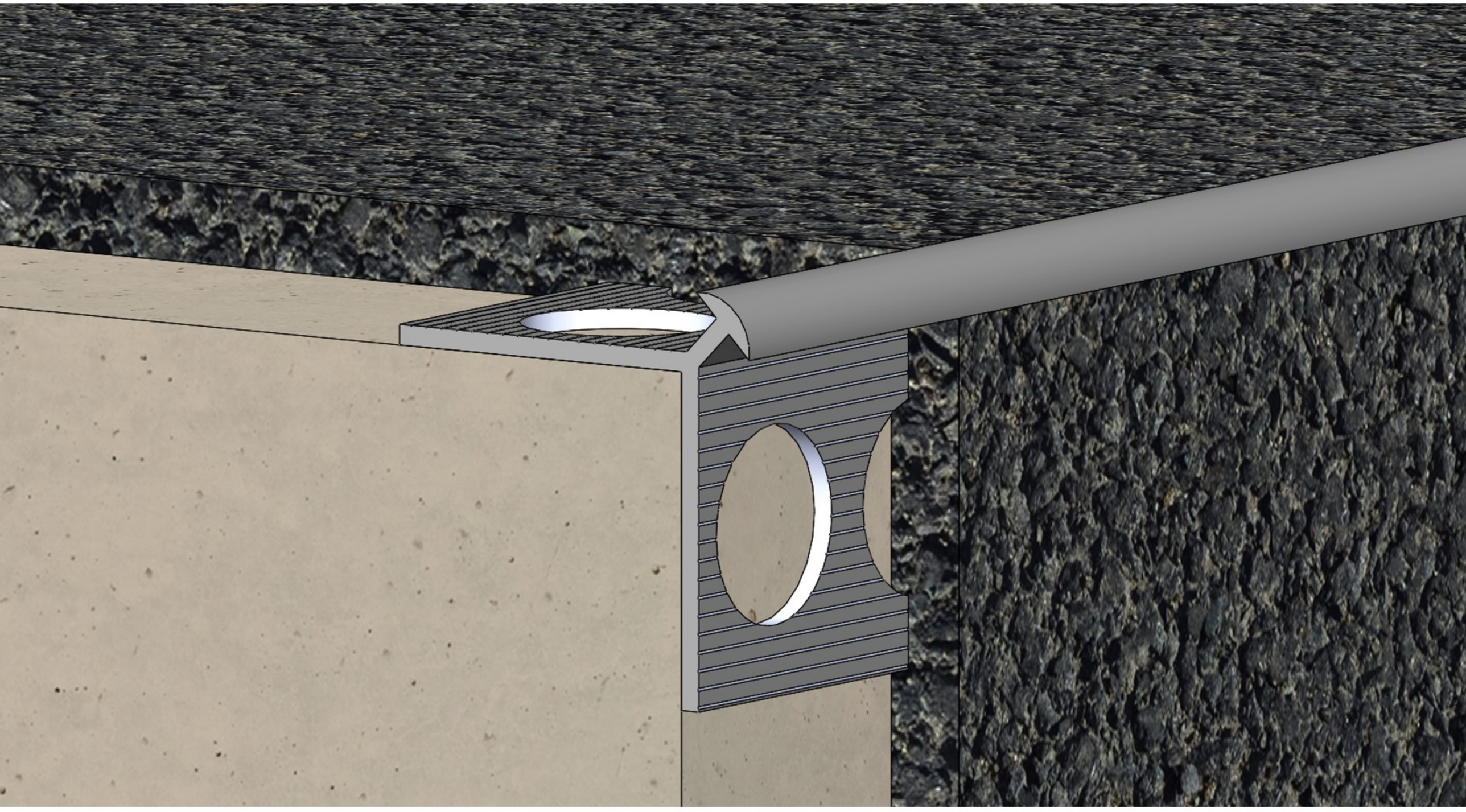

Product description:
Place this trim bead at the wall corner to meet a straight line when apply plaster on.

Feature:
Help to cut down the labor cost and improve workmanship speed to make the modern stylish finish.

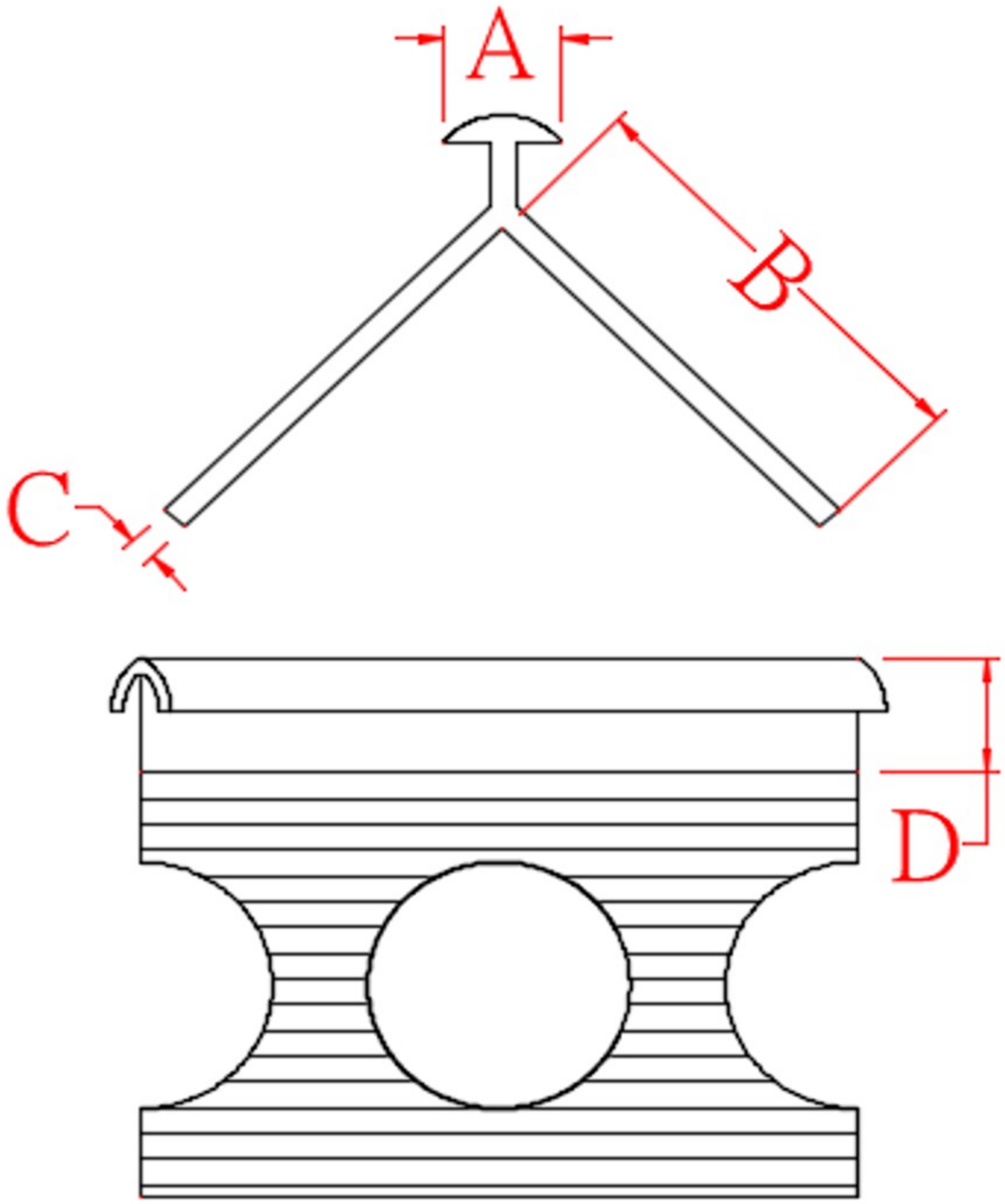

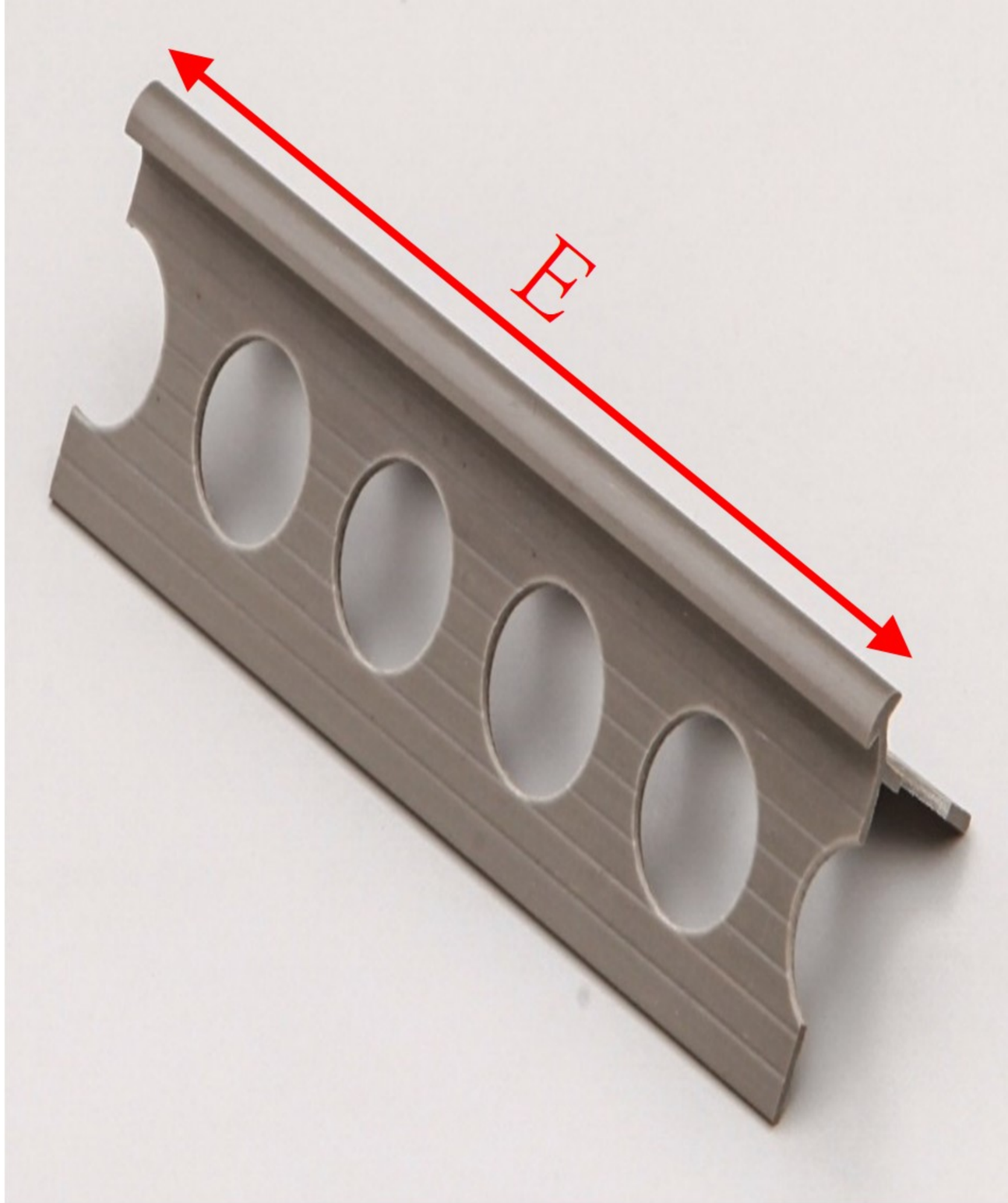

	A(mm)	B(mm)	C(mm)	D(mm)	E(m)
PH112	5	19	1.15	5	1.8
PH122	4.8	20	1.2	10	1.8

A Shaped Plaster Trim Bead

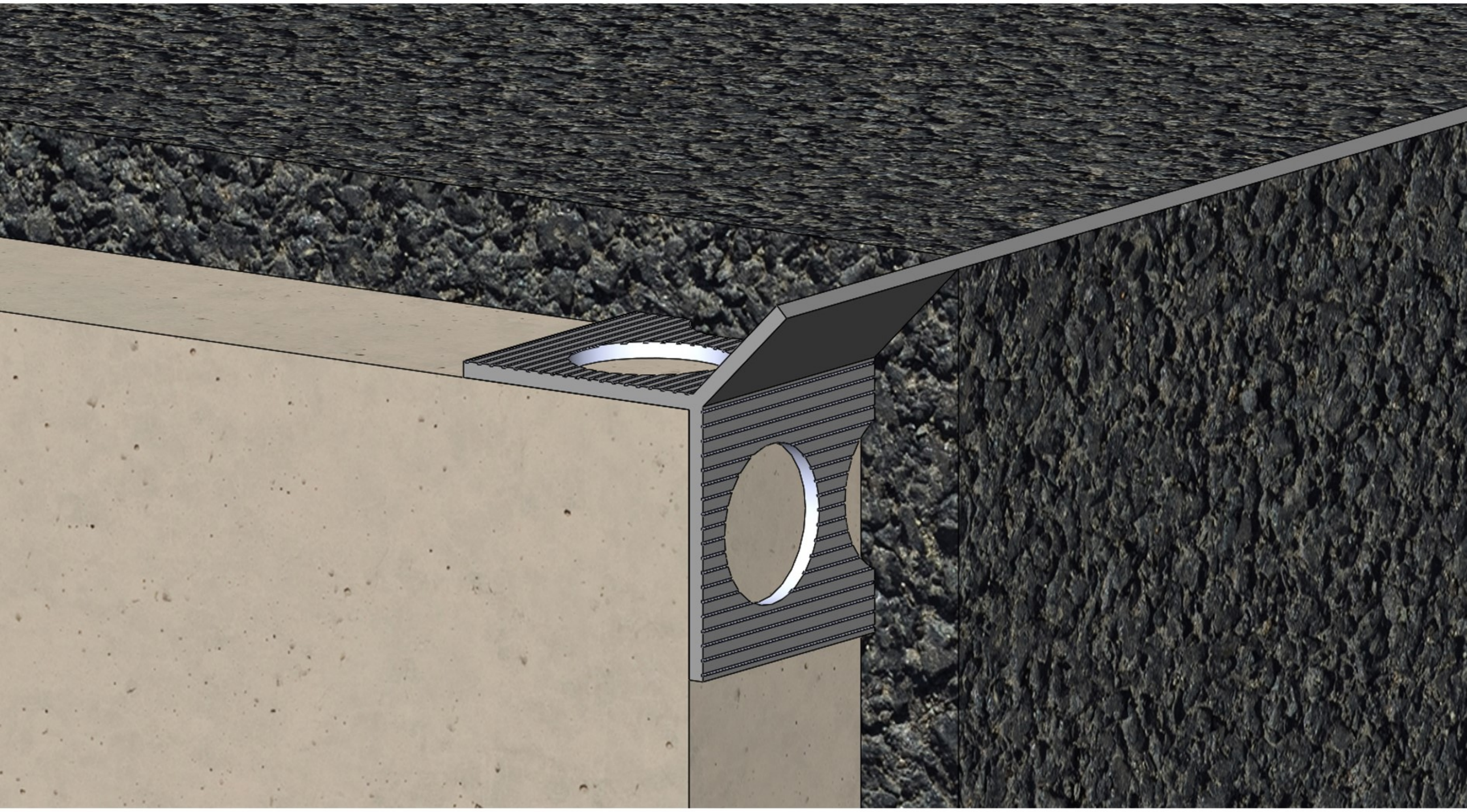

Product description:
Place this trim bead at the wall corner to meet a straight line when apply plaster on.

Feature:
Help to cut down the labor cost and improve workmanship speed to make the modern stylish finish.

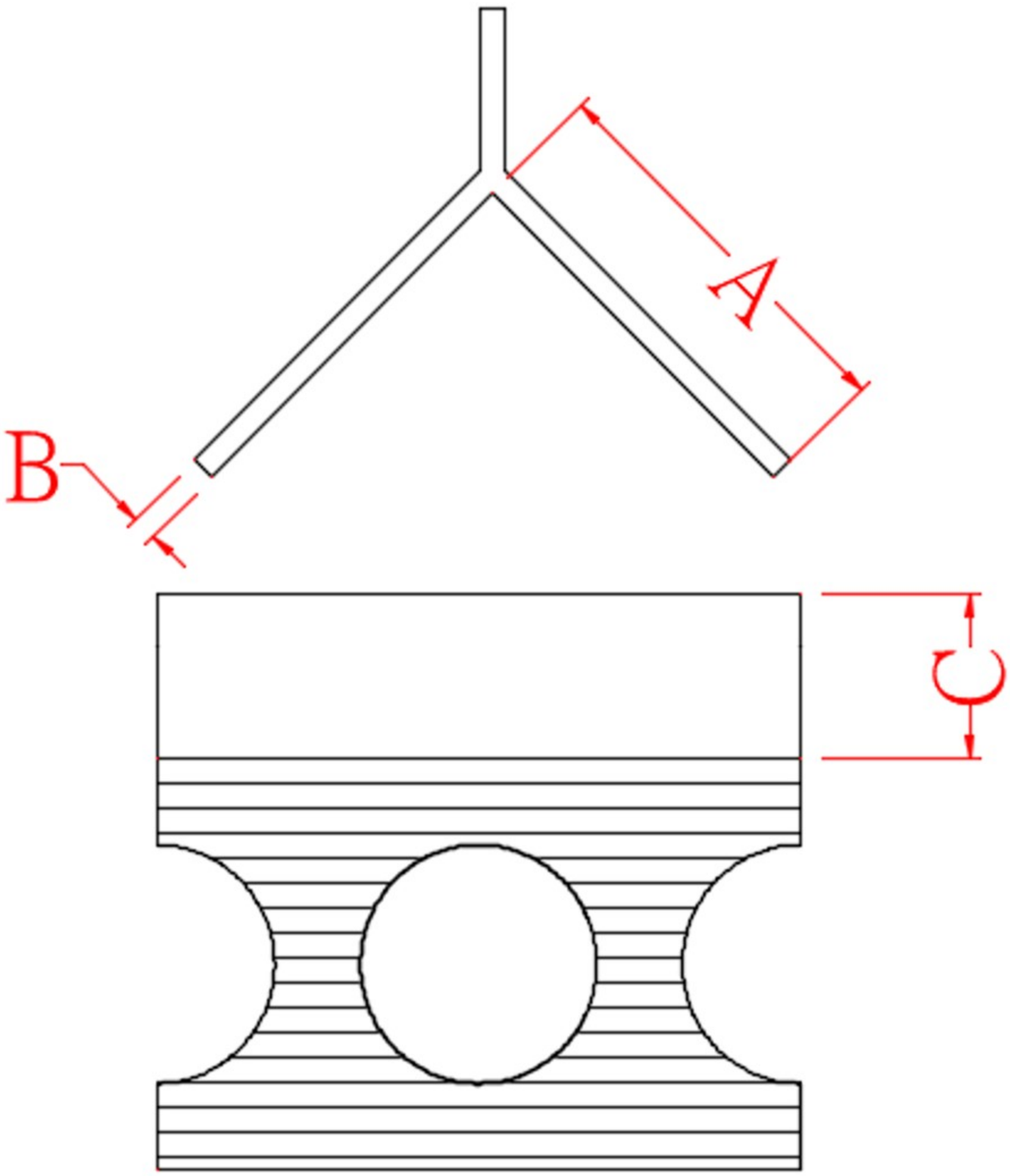

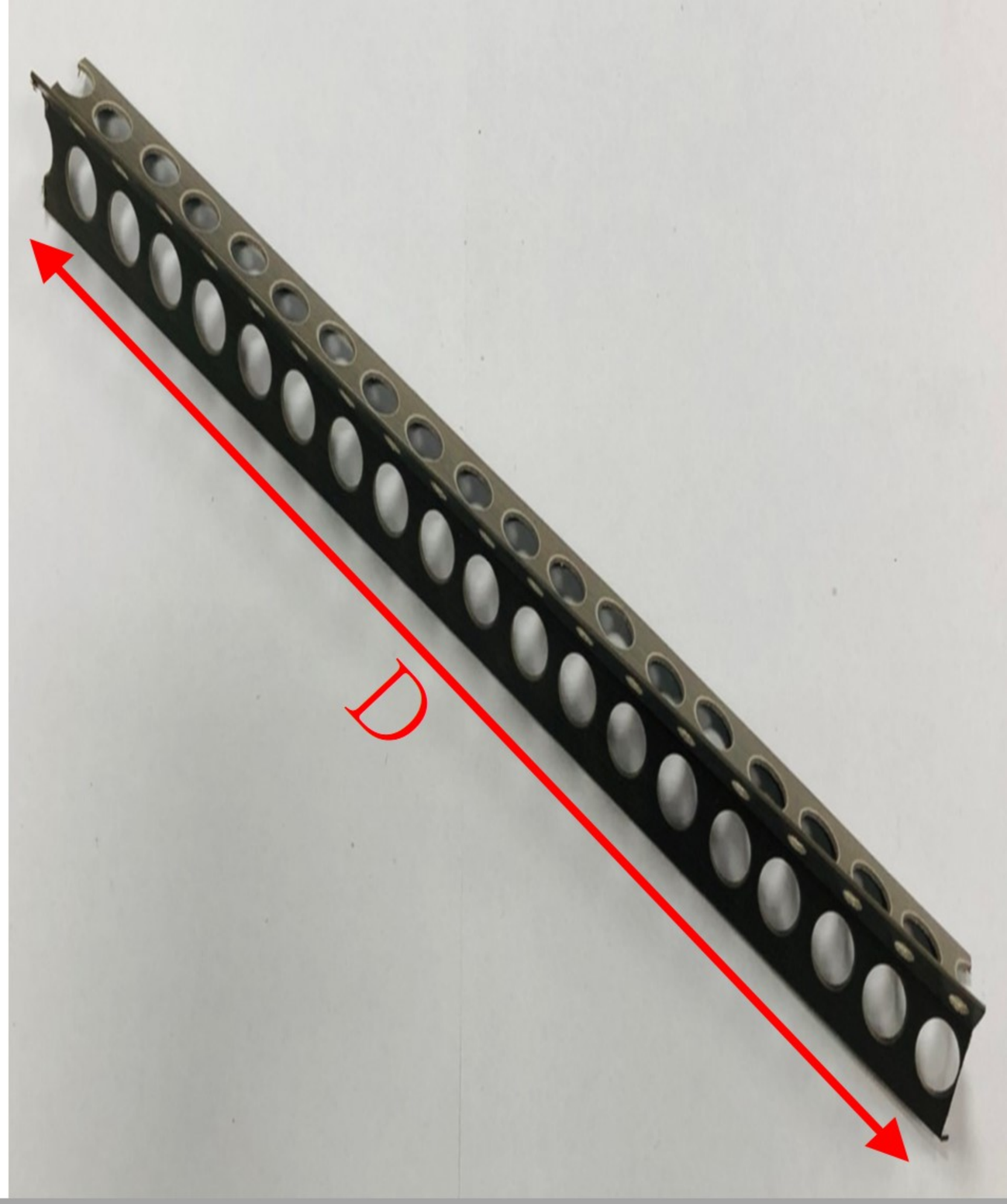

	A(mm)	B(mm)	C(mm)	D(m)
PH222	18.8	1.15	10.9	1.8
PH22C	19	1.15	7.5	1.8

W Shaped Plaster Trim Bead

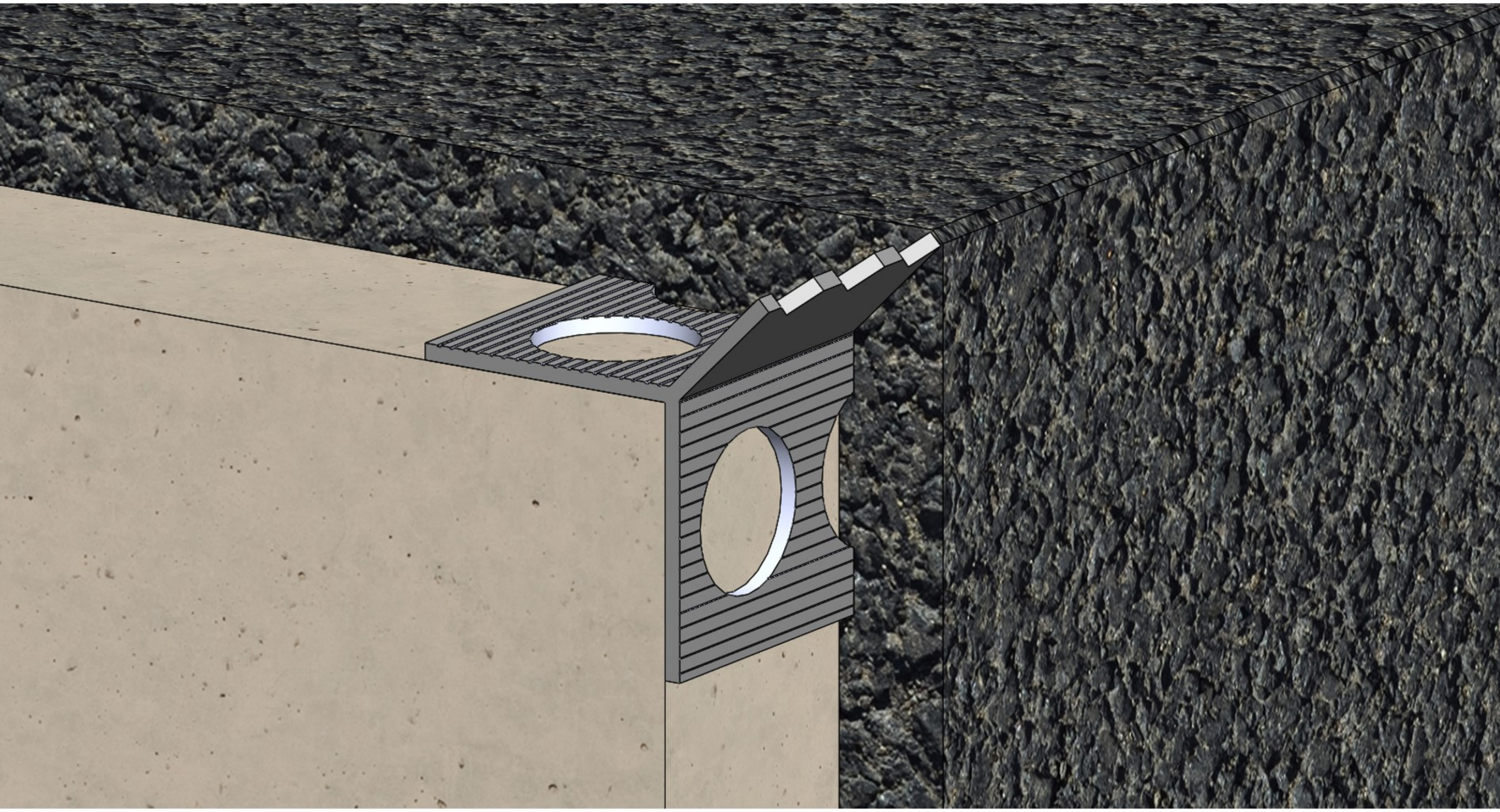

Product description:
Place this trim bead at the wall corner to meet a straight line when apply plaster on.

Feature:
Help to cut down the labor cost and improve workmanship speed to make the modern stylish finish.

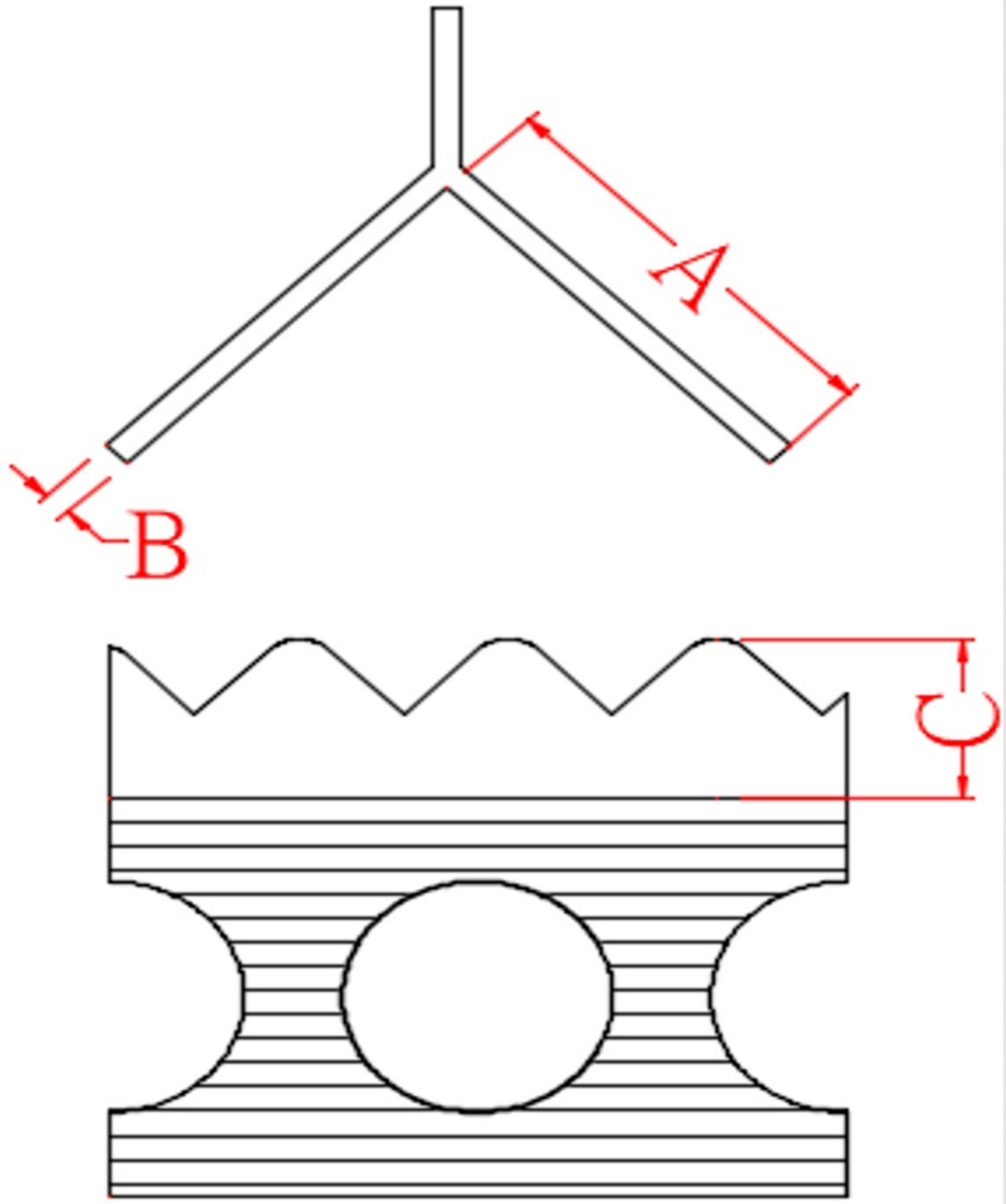

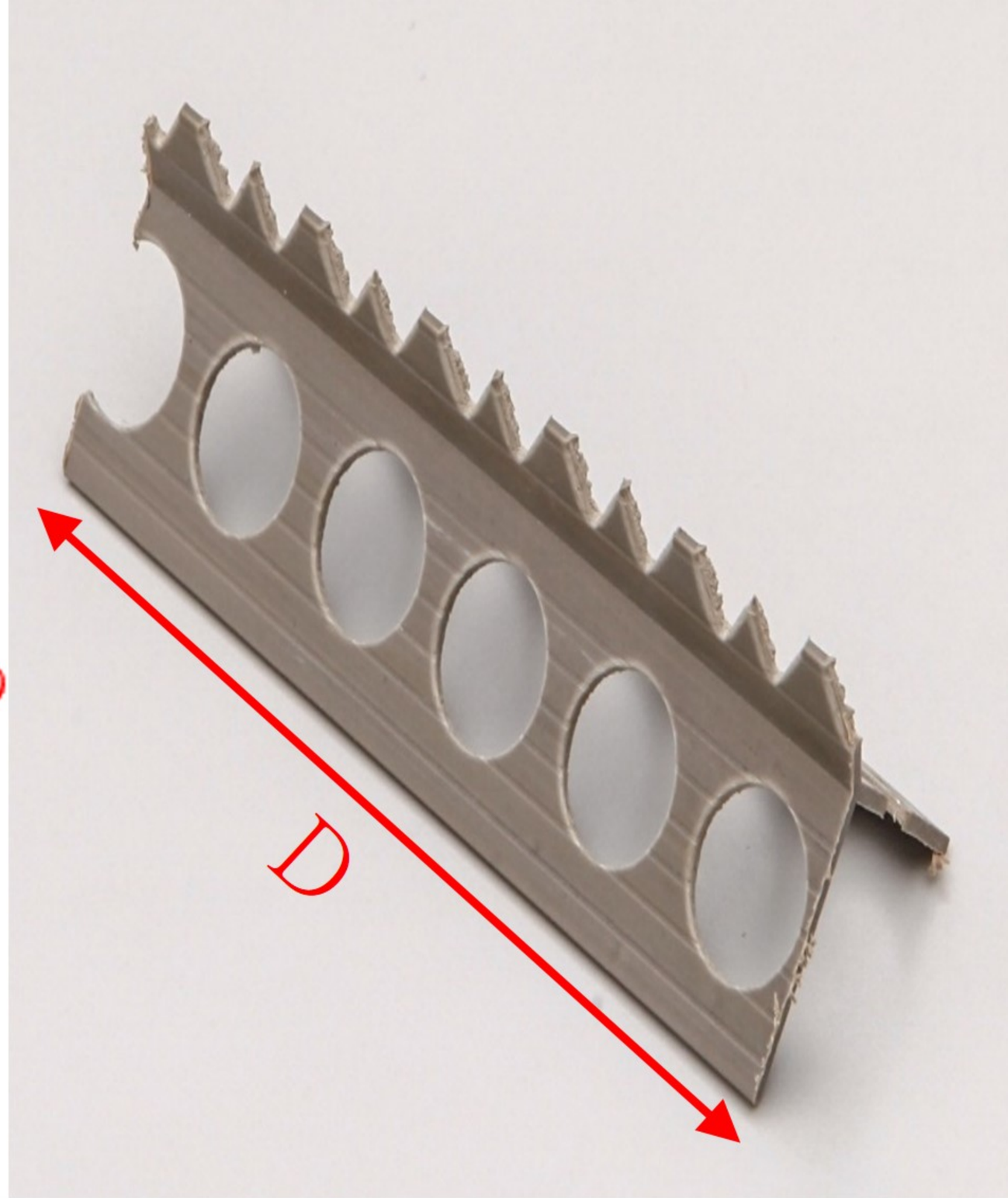

	A(mm)	B(mm)	C(mm)	D(m)
PH333	18.8	1.15	10.9	1.8
PH33C	18.5	1.15	7.5	1.8

Terrazzo Strip

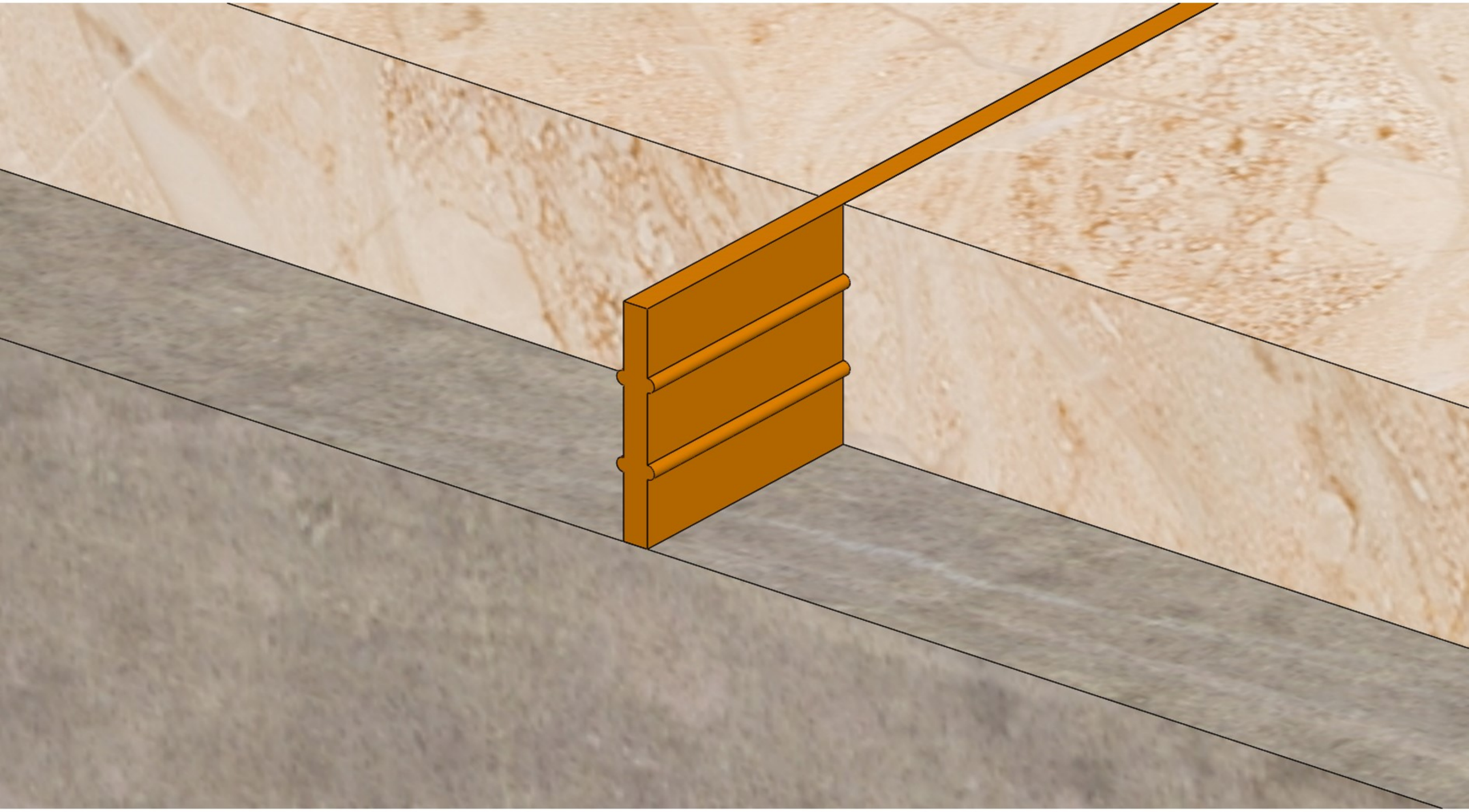

Product description:
Install the strips in all saw cuts and expansion areas to prevent the cracking of terrazzo topping.

Feature:
Improve the work efficiency and prevent the cracking of terrazzo topping.

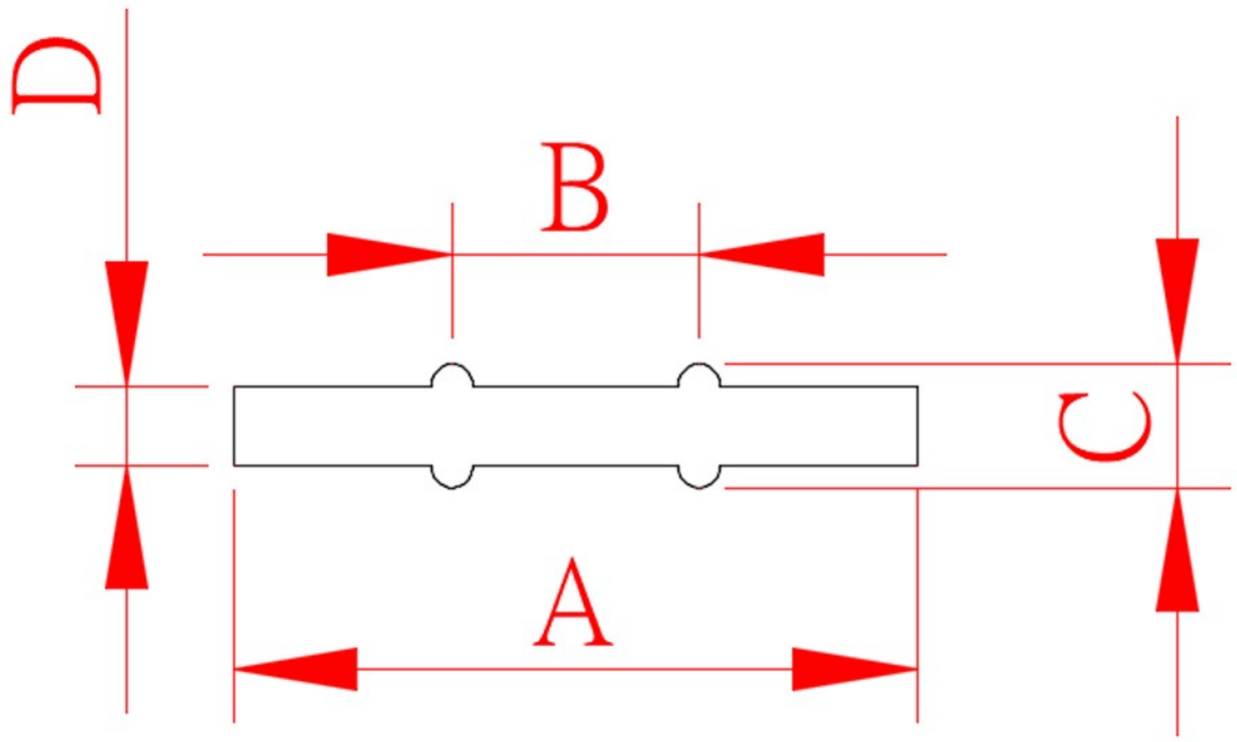

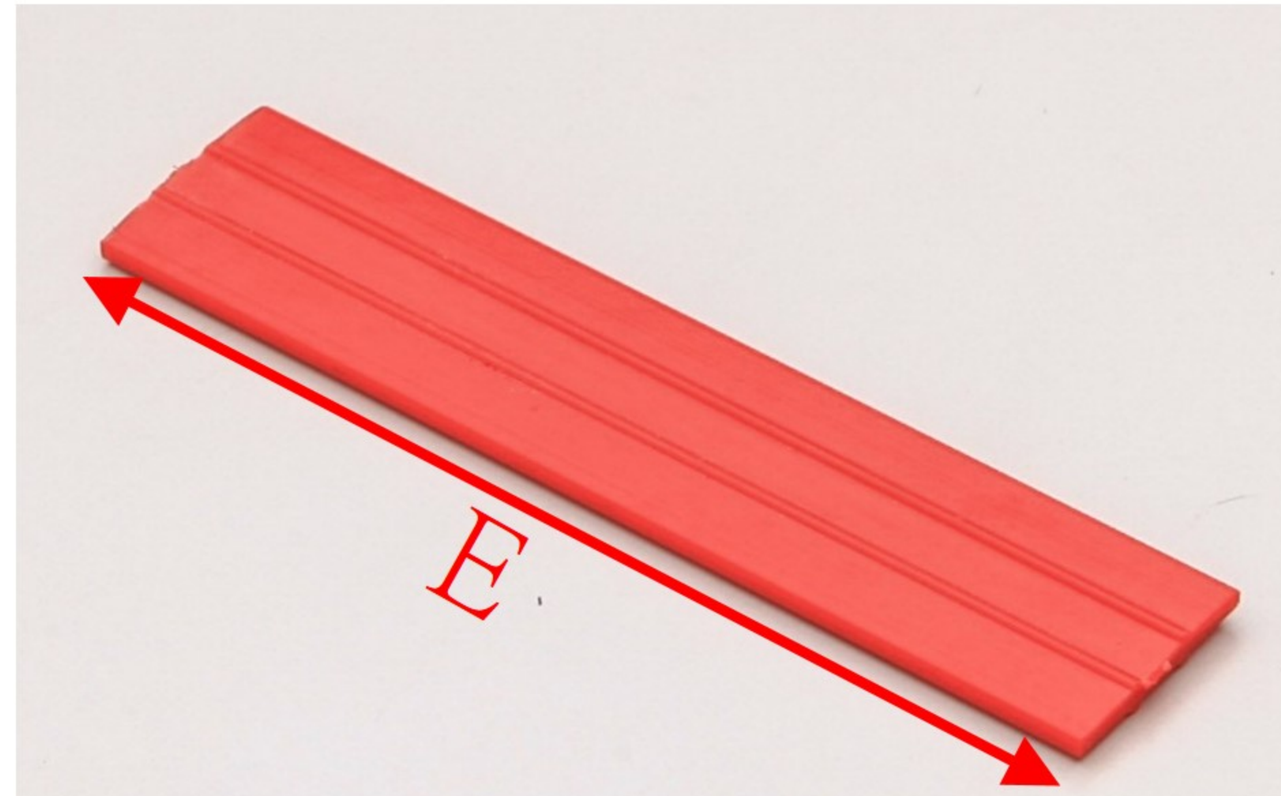

	A(mm)	B(mm)	C(mm)	D(mm)	E(m)
PL001R (Red)	16.6	6	3	1.9	1.0
PL001Y (Yellow)	16.6	6	3	1.9	1.0

Trapezoidal Groove Joint

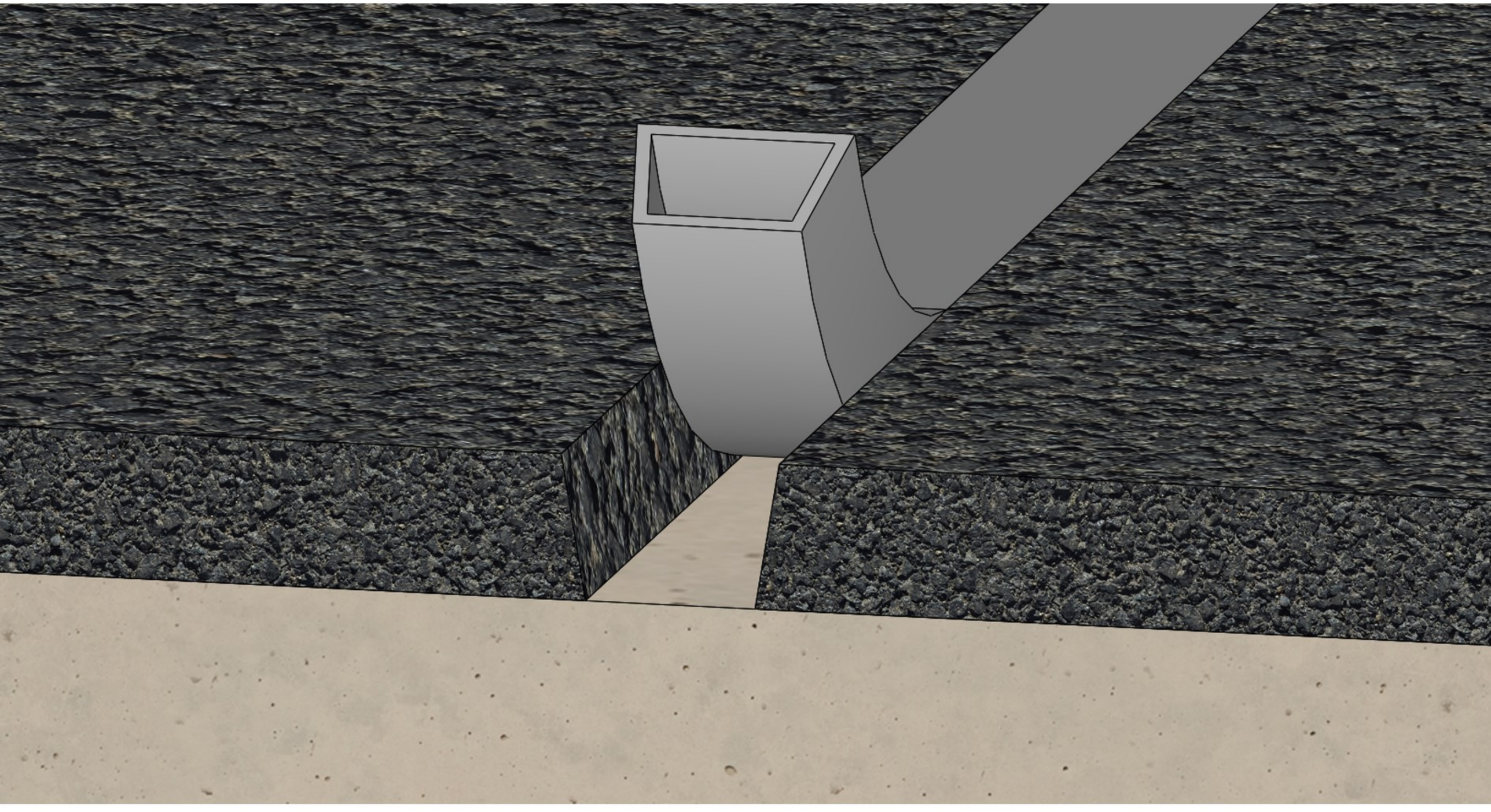

Product description:
Nail the pvc groove joint to the form or plaster spots and apply more gravel plaster on the joint. Remove the groove joint when plaster turns to semi-dry term to make modern look expansion groove.

Feature:
It can be used as expansion groove on the walls and improve the work efficiency.

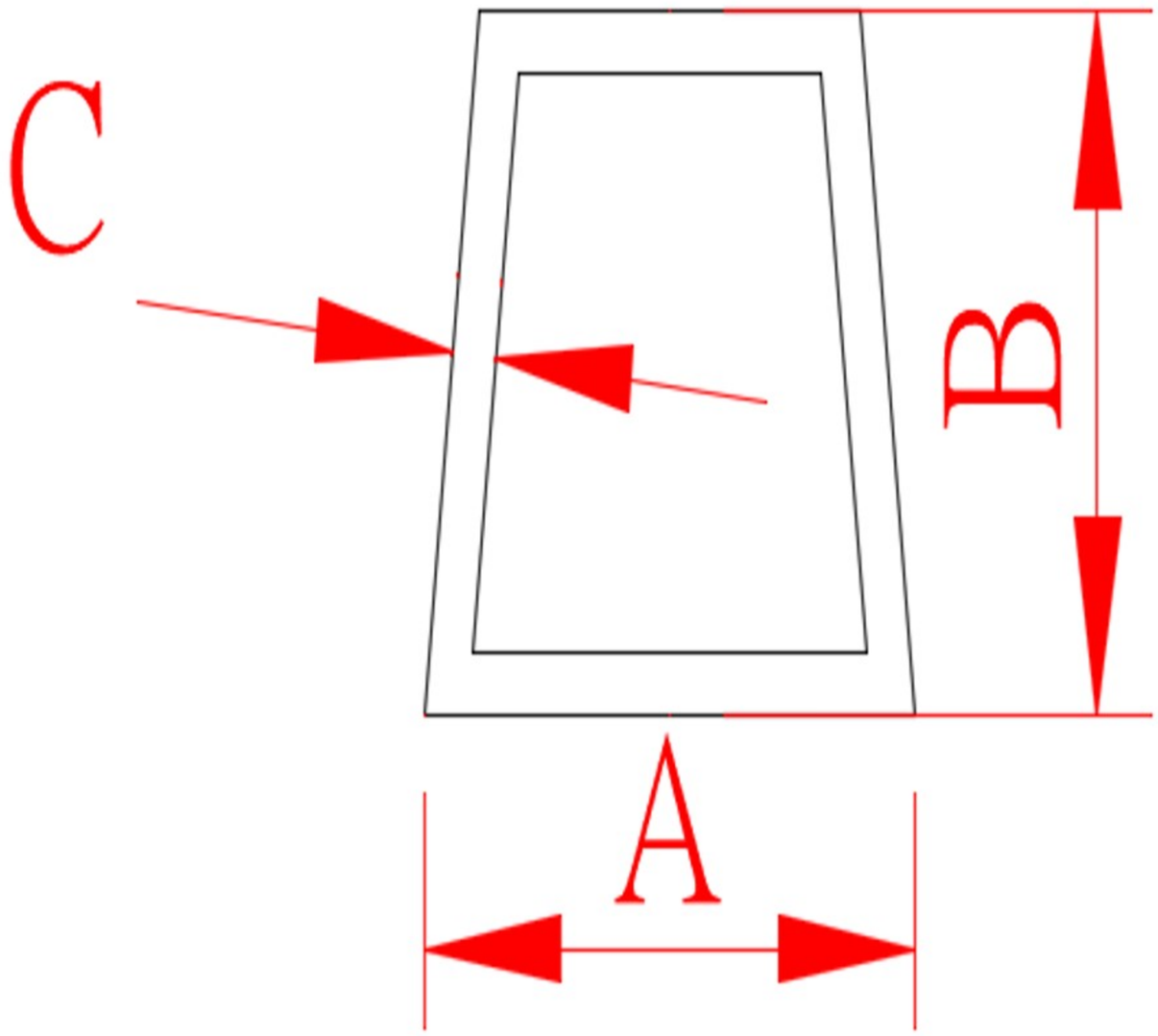

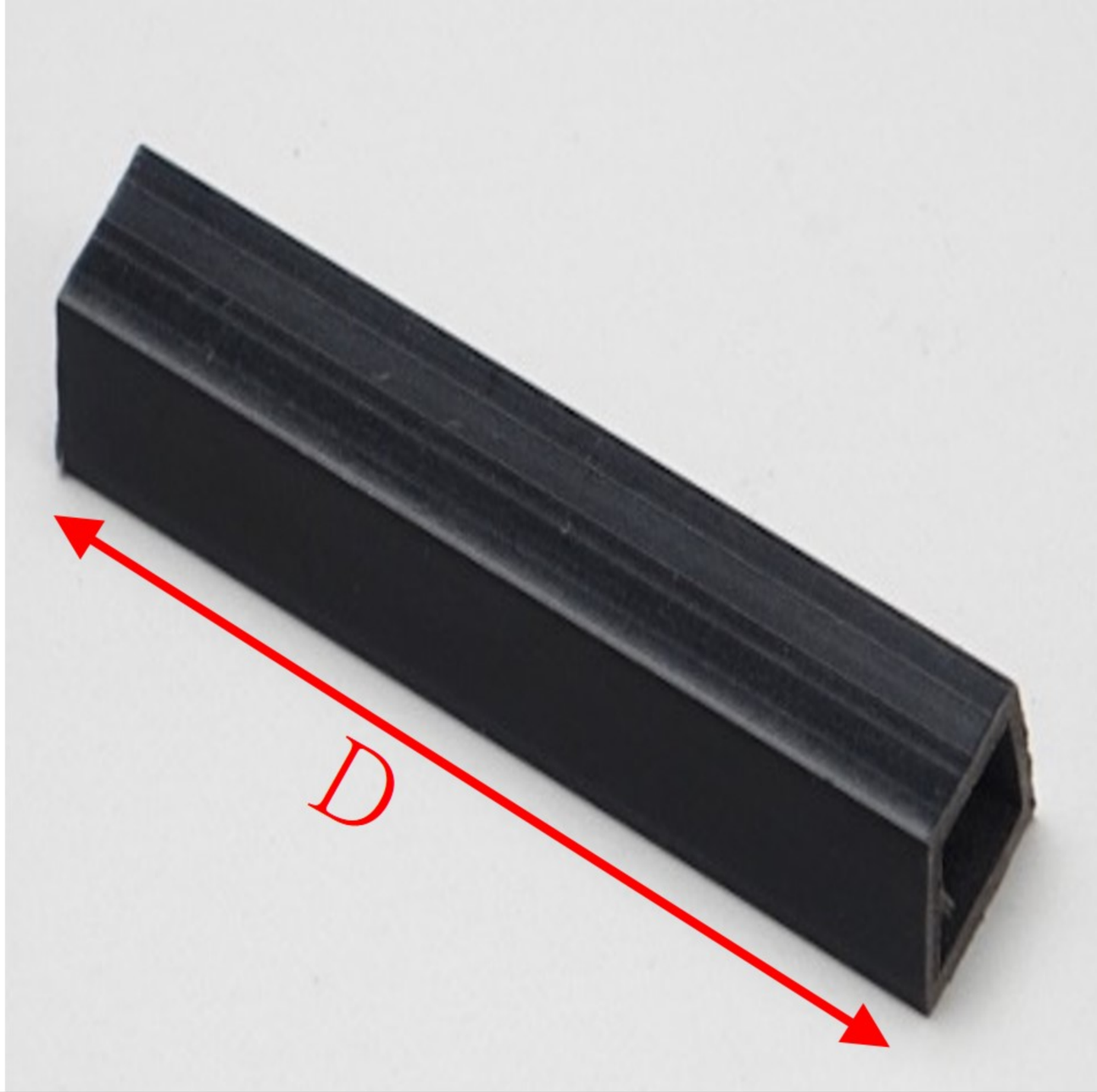

	A(mm)	B(mm)	C(mm)	D(m)
PH302	9	6	0.8	1.8
PH303	9	9	0.8	1.8
PH402	12	6	0.8	1.8
PH403	12	9	0.8	1.8
PH404	12	12	0.8	1.8
PH425	12	7.5	0.8	1.8
PH503	15	9	0.8	1.8
PH505	15	15	0.8	1.8
PH603	18	9	0.8	1.8

U Shaped Groove Joint

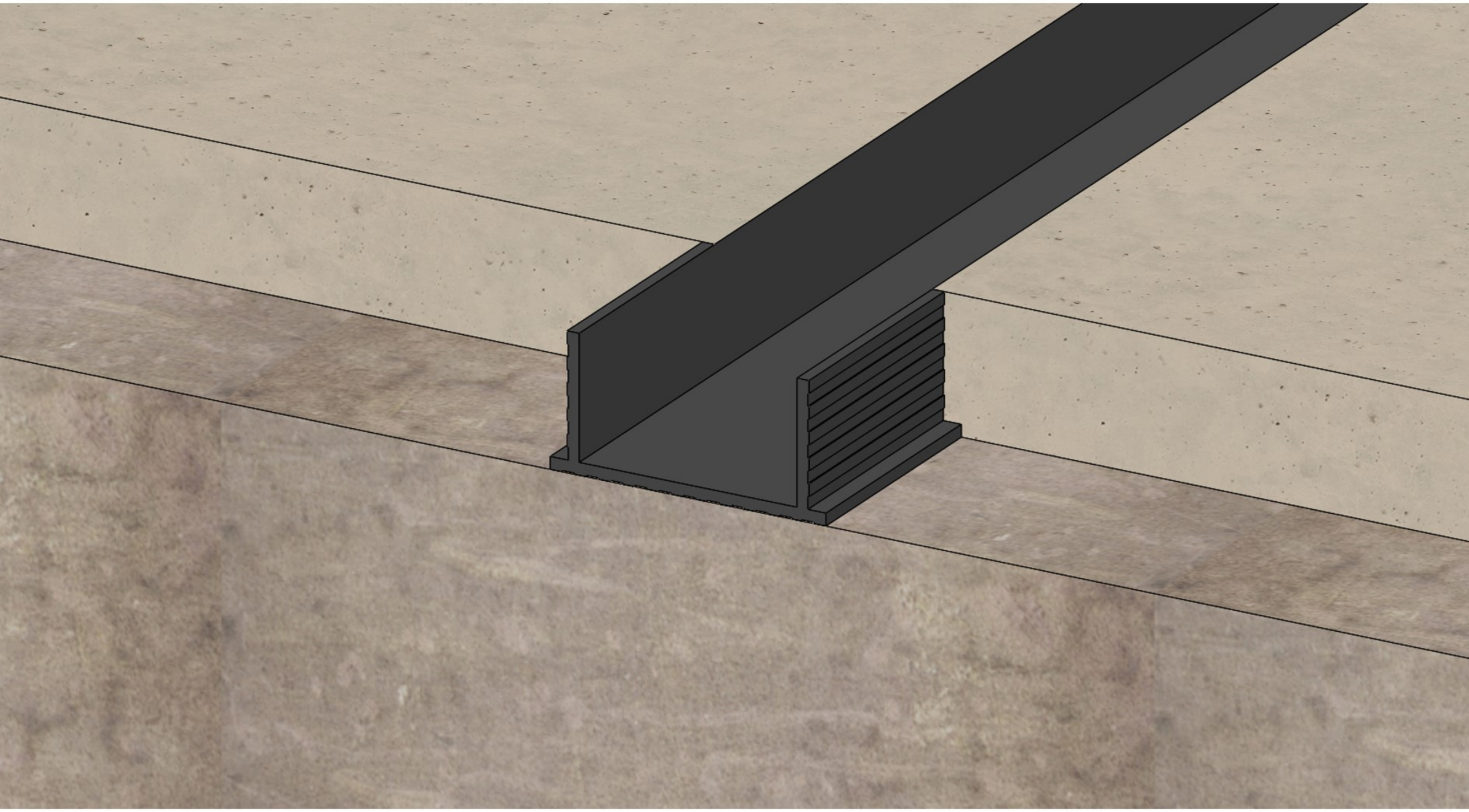

Product description:
Nail the pvc groove joint to the form or plaster spots and apply more gravel plaster on the sides of the joint to make modern look expansion groove.

Feature:
It can be used as expansion groove on the walls and improve the work efficiency.

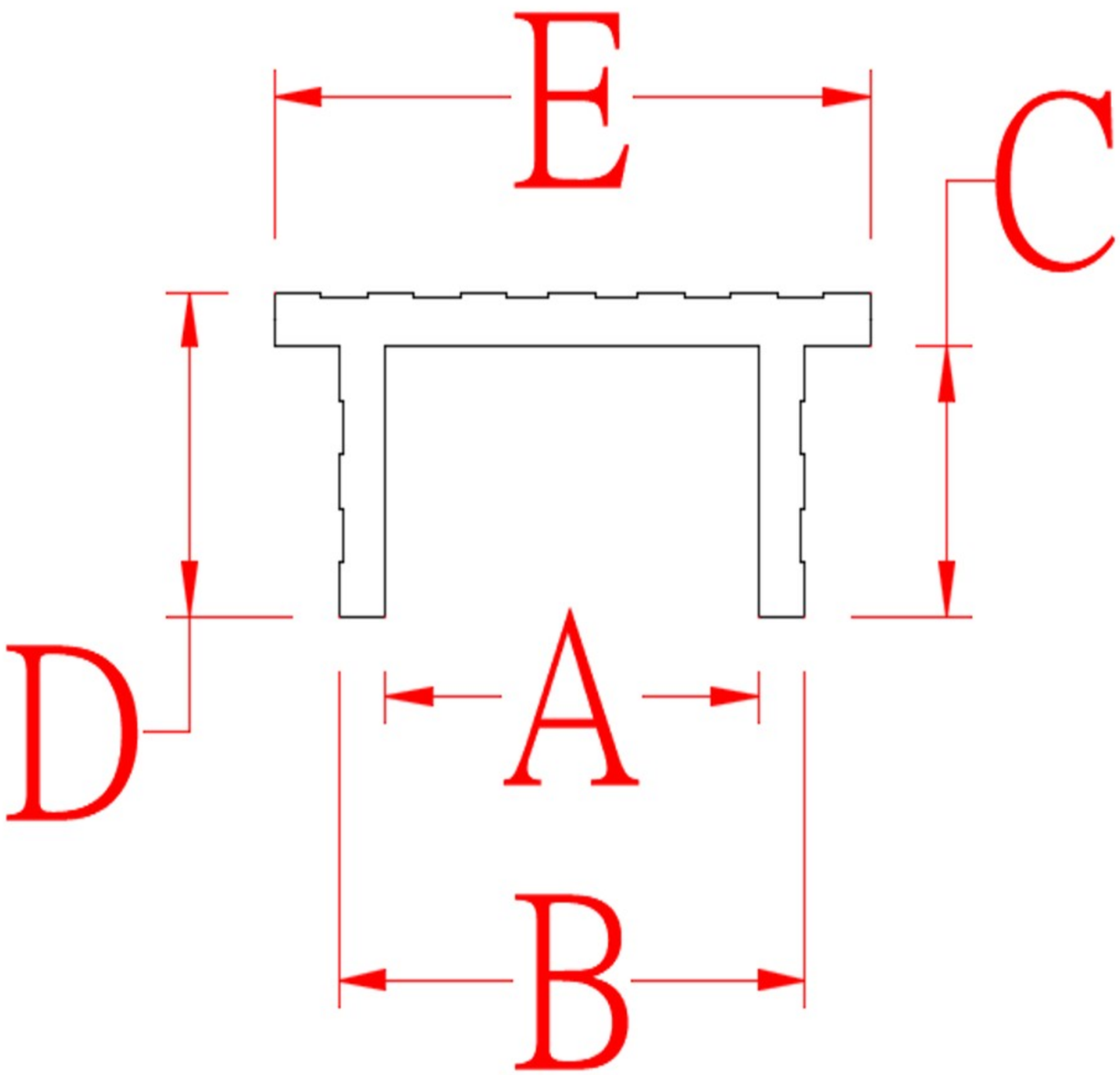

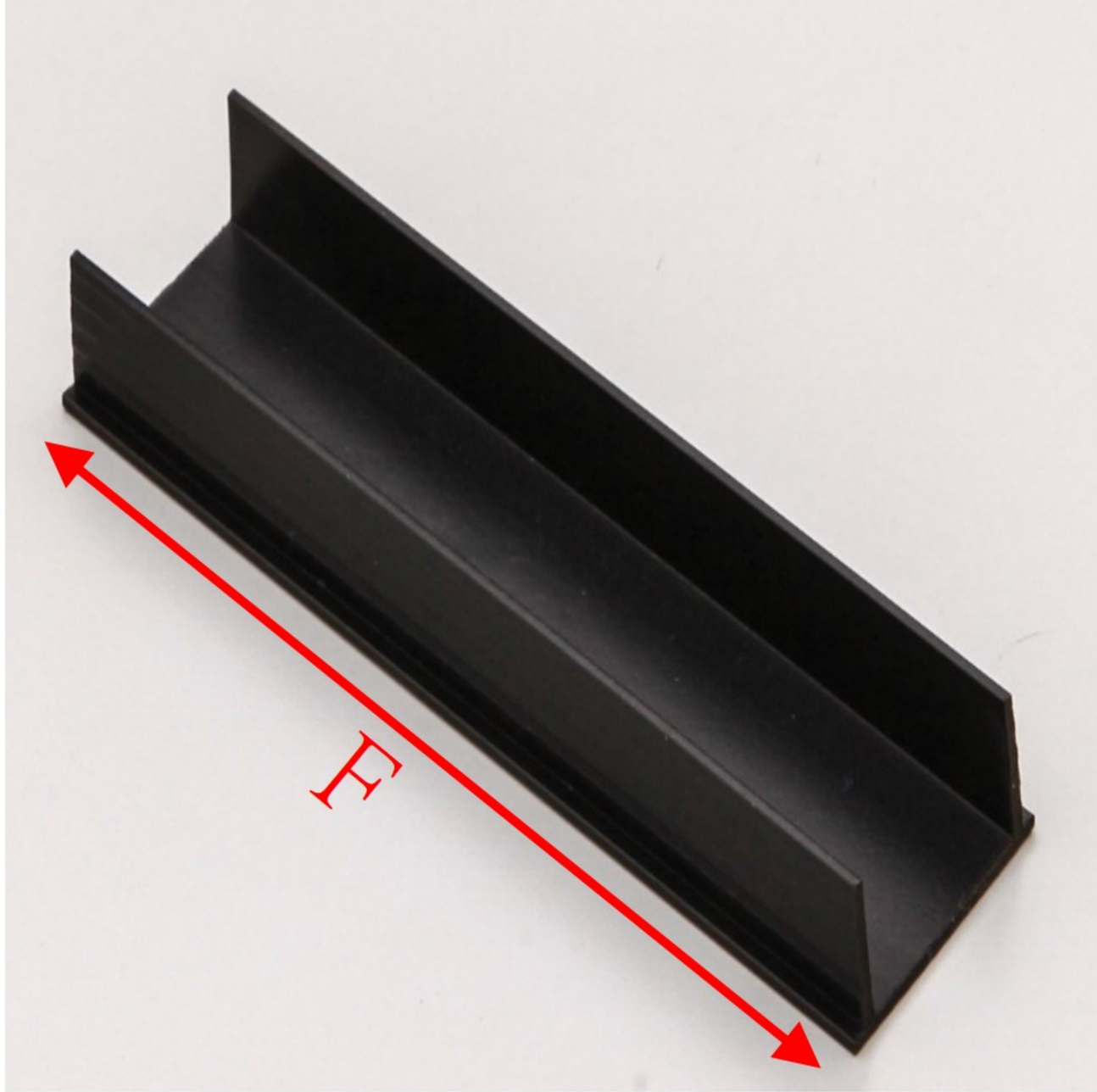

	A(mm)	B(mm)	C(mm)	D(mm)	E(mm)	F(m)
PH101	8	10	10	11	12.8	1.8
PH101B	8	10	5	6	12.8	1.8
PH175	8	10	7.5	8.5	12.8	1.8
PH102	18	20	10	11	22.8	1.8
PH102B	18	20	5	6	22.8	1.8